CITY OF BRISBANE

Department of Public Works - 50 Park Place
Brisbane, California 94005-1310
(415) 508-2130
Fax (415) 467-5547

MEMORANDUM

To: Infrastructure, Utilities & Franchise Subcommittee

From: Randy Breault, Director of Public Works/City Engineer via City Manager

Subject: City Hall Photovoltaic Request for Proposals

Date: June 21, 2017

City Hall's 2017 remodel intentionally included the removal of HVAC equipment from the roof to provide the maximum square footage that could ultimately be used for the installation of a photovoltaic system.

The attached RFP includes three features of note:

1. When ranking the final bidders, the city may take into consideration the expected yearly production over a 20-year period (see page 11, Note 1; page 16, Paragraph 14; page 75, Section 1.01.E).
2. The party awarded the contract will be required to provide the city with a letter of credit to guarantee the annual system production (see page 93, Section 1.01.D).
3. The contract includes a requirement to provide a web-based data acquisition and interactive application to allow public viewing of the real-time system performance and past historical performance (see page 94, Section 1.03.F).

The majority of this funding is recommended to be taken from payments required by Health Care Partners, which were specifically intended to fund renewable energy projects within the city.

The RFP is provided to the Subcommittee for review/comment prior to its issuance.

CITY OF BRISBANE, CALIFORNIA

SPECIFICATIONS

For Design and Construction Of:

ROOF-MOUNTED PHOTOVOLTAIC SYSTEM

JOB NO. ____

Mayor:	Lori S. Liu
Mayor Pro Tempore:	W. Clarke Conway
Council Member:	Madison V. Davis
Council Member:	Clifford R. Lentz
Council Member:	Terry A. O'Connell

City Manager: Clayton L. Holstine
Director of Public Works/City Engineer: Randy L. Breault

DATE: _____

Prepared by:

Department of Public Works
Engineering Division

O'Mahony & Myer
4340 Redwood Highway, #245
San Rafael, CA 94903

CITY OF BRISBANE

ROOF-MOUNTED PHOTOVOLTAIC SYSTEM

TABLE OF CONTENTS

NOTICE INVITING BIDS 1

INSTRUCTIONS TO BIDDERS 3

PROPOSAL 8

BIDDER'S BOND 10

BID SCHEDULE 11

INFORMATION REQUIRED OF THE BIDDER 13

NONCOLLUSION AFFIDAVIT 17

AGREEMENT 19

BOND FOR FAITHFUL PERFORMANCE 21

PAYMENT BOND 23

GENERAL CONDITIONS 25

GC-01. Definitions. 25
GC-02. Contract Documents Complementary. 26
GC-03. Time and Order of Work. 26
GC-04. Assignment Forbidden. 26
GC-05. Subcontracts. 27
GC-06. Notice to Discontinue Work Under Contract. 27
GC-07. Termination of Contract. 28
GC-08. Legal Address of Contractor 29
GC-09. Additional Surety. 29
GC-10. Authority of the Engineer. 30
GC-11. Changes. 30
GC-12. Extra Work. 30
GC-13. Suspension of Work - Extension of Time 31
GC-14. Delays - No Extra Compensation 32
GC-15. Right-of-Way. 32
GC-16. Obligations of Contractor 32
GC-17. Personal Attention. 33
GC-18. Protests. 33
GC-19. Claims 33
GC-19.A. Public Contract Code (PCC) Section 9204 Summary 34
GC-20. Contractor's Responsibilities. 36
GC-21. Contractor to Furnish Information. 36
GC-22. Specifications. 36
GC-23. Materials, Workmanship and Tests 36
GC-24. Inspection. 37

GC-25. Examination of Work. 37
GC-26. Defective Work or Materials. 37
GC-27. Right of Property in Materials. 38
GC-28. Title to Materials Found on the Work. 38
GC-29. Access to Work. 38
GC-30. Damages - Failure to Complete on Time. 39
GC-31. Patents and Copyrights. 39
GC-32. No Payment for Temporary Work. 39
GC-33. Partial Estimates. 39
GC-34. Partial Estimates May be Withheld. 40
GC-35. Partial Payments. 41
GC-36. Final Estimate and Payment. 42
GC-37. False or Erroneous Certificates. 42
GC-38. Acceptance of Work not a Waiver. 42
GC-39. Final Payment Terminates Liability. 43
GC-40. Payment Only in Accordance with Contract. 43
GC-41. Moneys May be Retained. 43
GC-42. Unpaid Claims. 43
GC-43. Cost Statement. 44
GC-44. Laws and Regulations. 44
GC-45. Payment of Wages. 44
GC-46. Eight-Hour Law. 44
GC-47. Overtime. 45
GC-48. Prevailing Rates of Wages and Department of Industrial Relations Requirements. 45
GC-49. Interference with Fire Hydrants, Highways and Fences. 46
GC-50. Other Rights-of-Way and Structures. 46
GC-51. Public Safety. 46
GC-52. Trespass. 46
GC-53. Character of Workmen. 47
GC-54. Employment of Labor. 47
GC-57. Antitrust Claims. 47
GC-58 Employment Eligibility. 47

SPECIAL CONDITIONS. 49

SC-01. Definitions. 49
SC-02. Contract Documents. 49
SC-03. Contract Plans and Specifications. 51
SC-04. Preconstruction Meeting. 51
SC-05. Construction Schedule. 51
SC-06. Emergency Calls. 52
SC-07. Services During An Emergency. 52
SC-08. Claims. 53
SC-09. Bidder's Breakdown Of Lump Sum Bid. 53
SC-10. Working Hours. 54
SC-11. Shop Drawings And Samples. 54
SC-12. Maintenance And Guaranty. 57
SC-13. Permits And Licenses To Be Obtained By The Contractor. 58
SC-14. Work Area Limits, Site Access, And Material Storage. 58

SC-15. Temporary Power. 58
SC-16. Construction Lighting. 58
SC-17. Dust And Smoke Control. 58
SC-18. Noise Criteria. 59
SC-19. Sanitation. 59
SC-20. Accumulation of Costs for Extra Work. 59
SC-21. Overtime Inspection. 59
SC-22. Lines, Grades, And Measurements. 60
SC-23. Hazardous Materials. 60
SC-24. Coordination And Cooperation With Others. 60
SC-25. Protection And Restoration Of Existing Improvements. 61
SC-26. Isolation Of Dissimilar Metals. 61
SC-27. Construction Water 61

DIVISION 1 - GENERAL REQUIREMENTS. 62

SECTION 1100 - CONSTRUCTION CONSTRAINTS 62
SECTION 01312 - PROJECT MEETINGS 63
SECTION 01329 - SAFETY AND TRAFFIC CONTROL. 64
SECTION 01355 - STORM WATER POLLUTION PREVENTION 67
SECTION 01600 - PRODUCT REQUIREMENTS 71
SECTION 01770 - PROJECT CLOSEOUT. 74

DIVISION 26 0000 – GENERAL ELECTRICAL CRITERIA. 75

DIVISION 26 3100 – PHOTOVOLTAIC SYSTEM ELECTRICAL. 93

91

REFERENCE DRAWINGS:

Sheet E1.1 Overall Site Plan
Sheet E5.1 Single Line/Partial Plan

APPENDIX A - 7/1/14-6/30/16 Energy Report

CITY OF BRISBANE DEPARTMENT OF PUBLIC WORKS
BRISBANE, CALIFORNIA

NOTICE INVITING BIDS

For the construction of **Roof-Mounted Photovoltaic System**, located in the City of Brisbane, San Mateo County, California.

N-1. Sealed proposals for constructing said portions of the Project, in accordance with the Owner's project specifications therefore numbered _____ will be received by the City of Brisbane Department of Public Works at its office, 50 Park Place, Brisbane, California 94005-1310, until 2:00 p.m., _____ at which time they will be publicly opened and read.

N-2. The work involves furnishing all engineering, labor, equipment, and materials for the design, permitting and installation of a photovoltaic system on the roof of the City of Brisbane's City Hall, and all appurtenant work.

N-3. Each proposal must be accompanied by a certified or cashier's check or by a corporate surety bond on form furnished by the Owner, as a guaranty that the bidder will, if an award is made to him or her in accordance with the terms of his or her proposal, promptly secure workers' compensation insurance, execute a contract in the required form and furnish satisfactory bonds for the faithful performance of the contract and for the payment of claims of material, men and laborers thereunder and insurance as required. Said check or bidder's bond shall be in an amount not less than ten percent (10%) of the estimated total contract payments for the maximum amount of work which may be awarded the bidder in accordance with the terms of his or her proposal, computed on the basis of the lump sum price stated in the Bid Schedule. The faithful performance bond and payment bond shall be not less than one-hundred percent (100%) of the estimated total amount of the payments to be made to the Contractor under the contract. The work shall be guaranteed for a period of two years after completion, secured with a warranty bond in the amount of one hundred percent (100%) of the amount to be paid under the contract.

N-4. Pursuant to applicable provisions of the Labor Code of the State of California, all work performed is subject to compliance monitoring and enforcement by the Department of Industrial Relations. The City Council of the Owner has ascertained the general prevailing rates of per diem wages and the general prevailing rates for legal holiday and overtime work applicable to the work contemplated under the contract. A schedule of said rates is on file at City Hall. Said schedule of rates is incorporated herein by reference and made a part hereof as if it were fully set forth herein. The successful bidder, and his or her subcontractors, will be required to pay not less than the wage rates set forth in said schedule. The successful bidder will be required to post prevailing wage job site notices, as prescribed by state law. Except as specifically set forth in Labor Code section 1771.1(a), no bidder or subcontractor may be listed on a bid proposal or awarded a contract or subcontract for public work on a public works project unless currently registered and qualified to perform public work as required by section 1725.5 of the Labor Code. No proposal shall be accepted without proof of the bidder's and all subcontractors' current registration to perform public work under section 1725.5. The bidder shall furnish in his or her proposal, the Department of Industrial Relations registration number and registration expiration date for the bidder and each subcontractor

included in the proposal.

N-5. The Contract Documents shall consist of this Notice Inviting Bids, together with the Instructions to Bidders, the Proposal with the Bid Schedule, the Agreement, the Bonds, the General Conditions, the Special Conditions, and the Detail Specifications, all of which documents are on file in the office of the Owner and are hereby referred to and made a part of this notice. The contract documents may be inspected in the office of the Owner at 50 Park Place, Brisbane, California 94005-1310, (415) 508-2130. Complete sets of said contract documents may be purchased through the City's website at www.brisbaneca.org; click on "Public Works Projects Out to Bid" on the right side of the page.

N-6. In order for a proposal to qualify for consideration in making an award, the bidder shall have had not less than three (3) years experience in the successful completion of work comparable to or greater in magnitude and complexity to the work herein contemplated. An Engineering Contractor's Class B license shall be held by the bidder at the time of bidding as a prerequisite for consideration in making an award. The bidder is required to be skilled and regularly engaged in the work required in the Specifications.

N-7. Fabricators and manufacturers of materials and equipment to be supplied are required to have successfully and regularly provided similar products of comparable magnitude, which have been in satisfactory service for five (5) years or more. Manufacturers of equipment to be supplied shall have a local service representative and local stocks of spare parts.

N-8. The Owner reserves the right to reject any and all bids, waive minor informalities not affecting substantial rights and delay award of contract for a period of up to sixty (60) calendar days after the bid opening date.

N-9 A mandatory prebid meeting will be held at _____ a.m. on _____, 2017. Bids for this project will only be accepted from qualified contractors who have a representative in attendance at the prebid meeting. This meeting will convene at the City of Brisbane office located at 50 Park Place, Brisbane, California 94005-1310.

CITY OF BRISBANE

By /S/ Randy Breault, P.E.

Director of Public Works/City Engineer

Dated: 5/9/2016

For information regarding this project, contact:

Randy Breault, City of Brisbane Project Manager, (415) 508-2131

CITY OF BRISBANE DEPARTMENT OF PUBLIC WORKS

INSTRUCTIONS TO BIDDERS

I-1. Form of Proposal and Signature.

a. The proposal shall be submitted on the form provided by the Owner and shall be enclosed in a sealed envelope marked and addressed as hereinafter directed.

b. The bidder shall state the unit or lump sum prices for which the bidder proposes to supply the labor, materials, supplies, or machinery, and perform the work required by the specifications. If a unit price and the total amount named by a bidder for any items are not in agreement, the unit price times the estimated quantity will be considered as representing the bidder's intention and the totals will be corrected to conform thereto. Similarly, if a discrepancy exists between item totals and schedule totals, the item totals will be considered as representing the bidder's intention and the totals will be corrected to conform thereto. The Proposal Forms provided shall not be separated from the balance of the Proposal nor the bound contract documents.

c. If the proposal is made by an individual it shall be signed by the individual and the individual's full name and address shall be given; if it is made by a partnership firm, it shall be signed by a partner of the firm and the partnership name and the name and address of each partner shall be given; and if it is made by a corporation, the name of the corporation and its address shall be given and the proposal shall be signed by a duly authorized officer or officers of the corporation and attested by the corporate seal. No oral, telegraphic, or telephonic proposals or modifications will be considered.

I-2. Preparation of the Proposal.

a. Blank spaces in the proposal shall be properly filled. The phraseology of the proposal must not be changed and no additions shall be made to the items mentioned therein. Unauthorized conditions, limitations, or provisos attached to a proposal will render it informal and may cause its rejection. Alterations by erasure or interlineation must be explained or noted to the proposal over the signature of the bidder. Alternative proposals will not be considered, unless specifically requested.

b. A bidder may withdraw his or her proposal before the hour fixed for opening bids, without prejudice to himself or herself by submitting a written request to the Owner for its withdrawal, and his or her proposal will be returned to him or her unopened when reached in the procedure of opening bids.

c. No proposal may be withdrawn after the hour fixed for opening bids without rendering the accompanying certified or cashier's check or bidder's bond subject to forfeiture as liquidated damages in like manner as in the case of failure to execute contract after award, as hereinafter provided.

d. No proposal received after the time named or at any place other than the place stated in the Notice Inviting Bids will be considered. All bids will be opened and

declared publicly. Bidders, their representatives and other interested parties are invited to be present at the opening. The Owner reserves the right to waive any informality in any bid, to reject any or all proposals, to reject one part of a proposal and accept the other, except to the extent that bids are qualified by specific limitations and to make award to the lowest responsible bidder as the interest of the Owner may require. Where bonds are required, the bidder shall name in his or her proposal the surety or sureties which have agreed to furnish said bonds.

e. Bidders are required to execute the Noncollusion Affidavit in the form attached as part of their bids.

I-3. Lowest Responsible Bidder. In selecting the lowest responsible bidder, consideration will be given not only to the price bid, but also to the general competency of the bidder for the performance of the work covered by the proposal. To receive favorable consideration, a bidder will be required to present evidence that they have successfully performed similar work of comparable magnitude as requested in the Information Required of Bidder section and may be required to submit other evidence satisfactory to the City that he or she, or his or her associates, are personally competent to manage the proposed undertaking and to carry it forward to a successful conclusion. Professional integrity and honesty of purpose shall be essential requirements. A showing of adequate financial resources may be required, but will not alone determine whether a bidder is competent to undertake the proposed work. The Owner shall have absolute discretion as to the evaluation of past work performance of any bidder, and the Owner's decision in regards thereto shall be deemed correct and shall be conclusive and binding.

I-4. Equalizing Factors. Wherever applicable, equalizing elements or factors not specifically mentioned or provided for herein, such as interest during construction, costs of transportation, inspection (including salaries and travel and subsistence expenses), installation, and operation, or any other factor or element in addition to the Owner will be taken into consideration in comparing bids for award of contract.

I-5. Local Conditions.

a. Bidders shall read the specifications and make their own estimates of the existing facilities and the difficulties which will attend the execution of the work called for by the proposed contract, including local conditions, uncertainty of weather, and all other contingencies. Bidders shall satisfy themselves by personal examination of the location of the proposed work, and by such other means as they may choose as to actual conditions and requirements. Information derived from the specifications, details, exhibits, or from the Engineer shall not relieve the Bidder of this responsibility, and the interpretation of and data disclosed by preliminary investigations is not guaranteed by the Owner.

b. The quantities of work or material stated in the unit-price items of the Bid Schedule are supplied only to give an indication of the general scope of the work; the Owner does not expressly or by implication agree that the actual amount of work or material will correspond therewith, but reserves the right to increase the amount of any unit-price item of the work by an amount up to and including twenty-five percent (25%) of any bid item(s), or to omit portions, or all of such work as may be deemed necessary or expedient by the Engineer without a change in the unit price.

I-6. Execution of Contract.

a. A bidder to whom award is made shall execute a written contract with the Owner on the form of agreement attached hereto, secure the payment of workers' compensation, and furnish good and approved bonds and insurance as required in the following paragraphs, all within fifteen (15) calendar days from the date of mailing of a notice from the Owner to the bidder, according to the address given by him or her, of the acceptance of his or her proposal, or such additional time as may be allowed by the Owner.

b. At the option of the Owner, additional time to furnish said documents may be allowed with the provision that such additional time will be counted toward the time stipulated to perform the work under subsection III entitled "Time of Completion", in Section 01100 "Construction Constraints" of the Detail Specifications.

c. If a bidder to whom award is made fails or refuses to enter into contract as herein provided, or to conform to any of the stipulated requirements in connection therewith, the money represented by his or her check or bidder's bond shall become the property of the Owner as provided in the section hereof entitled "Bonds," the award will be annulled, and an award may be made to the bidder whose proposal is next most acceptable to the Owner and such bidder shall fulfill every stipulation embraced herein as if he or she were the party to whom the first award was made.

d. A corporation to which an award is made may be required before the contract is finally executed, to furnish evidence of its corporate existence, of its right to do business in California, and of the authority of the officer signing the contract and bonds for the corporation to so sign.

I-7. Bonds. Each bidder shall furnish an approved check or bidder's bond and the bidder to whom the contract is awarded shall furnish certain other bonds all as stipulated herein. Contract bonds shall be secured at no cost to the Owner, from a surety company authorized to write such bonds in the State of California and shall be subject to the approval and acceptance of the Owner. Failure to submit contract bonds from a surety company which meets these requirements shall be due cause to reject the bidder's proposal.

a. Bid Bond or Check.

(1) Each bidder shall submit with his or her proposal an unconditional certified or cashier's check drawn on a solvent state or national bank, or a bidder's bond with a responsible corporate surety, on the form furnished by, or approved by, the Owner, in the sum stated in the Notice Inviting Bids, payable to the City of Brisbane, as guaranty that the bidder will, if an award is made to him or her in accordance with the terms of the proposal, promptly execute a contract in the required form and furnish satisfactory bonds and insurance.

(2) If a bidder to whom an award is made fails or refuses to execute the contract, secure the payment of workers' compensation, if required, and furnish the required bonds and insurance all within the time stated in the section hereof entitled "Execution of Contract," the moneys represented by said check or bidder's bond shall become and remain the property of the Owner and shall be subject to deposit with other moneys belonging to the Owner, the amount thereof being agreed to by the bidder as liquidated damages due to the Owner on account of the delay in the execution of the contract, bonds and insurance and in the performance of work thereunder, resulting from such failure or refusal. The check of a bidder to whom contract has been awarded will be returned to him or her after all of the acts, for the performance of which said check is required, have been fully performed. Checks of other

bidders will be returned as soon as their proposals are rejected or in any event at the expiration of sixty (60) calendar days from the date of opening bids. The liability of the Owner in connection with the said checks shall be limited to the return of the checks as herein provided.

b. Faithful Performance Bond. A bidder to whom contract is awarded shall, within the time mentioned in the section hereof entitled "Execution of Contract", furnish a bond conditioned upon the faithful performance of the said bidder of all covenants and stipulations in the contract. Said bond shall be on the form provided by the Owner and in an amount not less than one hundred percent (100%) of the estimated aggregate payments to be made under the contract.

c. Payment Bond. Within the time mentioned in the section hereof entitled "Execution of Contract," a bidder to whom contract is awarded for the improvement, erection, or construction of any building, road, bridge or other structure, excavation, or other mechanical work shall also furnish a payment bond on the form provided by the Owner and shall be in a sum not less than one hundred percent (100%) of the total amount payable by the terms of the Contract. Said bond shall also be in accordance with provisions of Section 3248 of the California Civil Code.

d. Warranty Bond. After completion and acceptance of the work and prior to the filing of the notice of completion as mentioned in Section GC-36, the bidder to whom the contract is awarded shall deliver to the Owner a surety bond to guaranty the work for the period specified in the Special Conditions of these specifications. Said bond shall be in the amount of at least one hundred percent of the amount to be paid under the contract. Instead of providing such bond, the bidder to whom the contract is awarded may, at his or her option, provide that the faithful performance bond furnished under the contract shall remain in full force and effect for said purposes in the amount of not less than 100 percent of the amount to be paid under the contract.

I-8. Workers' Compensation Insurance. Before the contract is executed on behalf of the Owner, a bidder to whom contract has been awarded shall furnish satisfactory evidence that he or she has secured in the manner required by law the payment of worker's compensation provided for in the California Labor Code and all amendments thereto. The successful bidder shall execute a certificate regarding workers' compensation on a form approved by the Owner. This requirement does not apply to contracts for furnishing materials and equipment only.

I-9. Liability Insurance.

a. Prior to execution of the contract by the Owner, the Contractor shall furnish an insurance policy or a signed and acknowledged certificate thereof filed with and subject to the approval of the Owner, naming the Contractor, the Owner, the Engineer and respective representatives as being insured and protected by public liability and property damage insurance with insurance carriers satisfactory to the Owner against loss from liability imposed by law from damage on account of bodily injury, including death resulting therefrom, suffered or alleged to have been suffered by any person or persons, resulting directly or indirectly from the performance or execution of this contract or any subcontract thereunder, and also to protect said Contractor, the Owner and Engineer against loss from liability imposed by law for damage to any property, caused directly or indirectly by the performance or execution of

this contract or any subcontract thereunder, which insurance shall cover accidents arising out of the use and operation of automobiles, trucks and all other equipment used in the execution of the contract. Insurance coverage shall include Owner furnished equipment that has been temporarily placed in the custody of the Contractor.

b. All liability insurance shall be maintained by the Contractor in full force and effect during the entire period of performance under the contract and the amount of coverage of said insurance shall be not less than the following:

Combined Single Limit: $ 1,000,000

Said certificate shall also provide that said policy or policies shall not be amended or canceled without giving of at least 30 days prior written notice to Owner. Evidence of renewals of liability insurance shall be furnished to the Owner prior to expiration of current policies.

I-10. Address and Marking of Proposal. The envelope enclosing the proposal shall be sealed and addressed to the Public Works Director/City Engineer, City of Brisbane, 50 Park Place, Brisbane, California 94005-1310. The envelope shall be plainly marked in the upper left-hand corner with the name and address of the bidder and bear the words "Proposal for", followed by the name of the work and the date and hour of opening bids. The certified or cashier's check or bidder's bond shall be enclosed in the same envelope with the proposal.

A bid will not be accepted after the date and time designated in the Notice Inviting Bids. The "official" time will be kept and determined by the City. It is the sole responsibility of the bidder to see that his or her bid is delivered and received in proper time. Any bid received after said designated date and time shall be returned to the bidder unopened.

CITY OF BRISBANE DEPARTMENT OF PUBLIC WORKS

PROPOSAL

FOR THE CONSTRUCTION OF

Roof-Mounted Photovoltaic System

Proposals received until 2:00 P.M., _____

To the City Council of the City of Brisbane:

The undersigned hereby declares, as bidder, that the only persons or parties interested in this proposal as principals are those named herein, that no Council Member or any other officer or employee of the City in any manner interested directly or indirectly in this proposal or in the profits to be derived from the contract proposed to be taken; that this bid is made without any connection with any other person or persons making a bid for the same purpose; that the bid in all respect is fair and without collusion or fraud; that he or she has read the Notice Inviting Bids and the Instructions to Bidders herein attached and agrees to all the stipulations contained therein; that he or she has examined the site of the work, the form of Agreement approved by the City, and the specifications, details and exhibits therein referred to, and he or she proposes and agrees that if his or her bid as submitted in the attached Bid Schedule be accepted, he or she will contract in the form so approved to perform all the work mentioned in said approved form of Agreement and the specifications and to complete the same within the time stipulated therein; and that he or she will accept in full payment therefore the prices named in said Bid Schedule. Said prices are to include and cover the furnishing of all materials, the performing of all the labor requisite or proper, and the providing of all necessary machinery, tools, apparatus, and other means of construction; and the performance and completion of all the work in the manner set forth, described and shown in the specifications or on the details and exhibits for the work in the form of Agreement.

The bidder further agrees that, upon receipt of written notice of the acceptance of this proposal within sixty (60) calendar days after the date of opening of the bids, bidder will execute the contract in accordance with the proposal as accepted, secure the payment of workers' compensation, furnish the required bonds and insurance, all within fifteen (15) calendar days from date of mailing of said notice of acceptance to him or her at his or her address as given below, or within such additional time as may be allowed by the Owner and that upon his or her failure or refusal to do so within said time, then the certified or cashier's check or bidder's bond, accompanying this bid, and the money payable thereon, shall be forfeited to and become the property of the City of Brisbane as liquidated damages for such failure or refusal; provided that if said bidder shall execute the contract, secure the payment of workers' compensation, and furnish the required bonds and insurance within the aforesaid time his or her certified or cashier's check, if furnished, shall be returned to him or her within three (3) working days thereafter, or the bid bond, if furnished, shall become void.

The undersigned bidder acknowledges receipt of the following addenda:

Addendum No.	Description	Date Received

The bidder declares that the surety or sureties named in the space provided below have agreed to furnish bonds in the form and aggregate amounts set forth in the accompanying Notice Inviting Bids and the Instructions to Bidders, in the event contract is awarded on the basis of this proposal.

The bidder declares that the license listed below is his or hers, is current and valid, and is in a classification appropriate to the work to be undertaken.

Contractor's License No._____
License Expiration Date_____

The bidder declares that he or she is registered with the Department of Industrial Relations to perform public work, and that the registration list below is his or hers, and is current and valid.

DIR PWCR Registration No.

_____

Registration Expiration Date _____

The bidder declares under penalty of perjury under the laws of the State of California that the foregoing is true and correct.

Dated: _____

By (Bidder): _____

Title: _____

Attest By:_____

(CORPORATE SEAL)

Title: _____

Surety or Sureties:_____

BIDDER'S BOND

(Not necessary when certified or cashier's check accompanies bid)

We, the undersigned principal and surety, acknowledge ourselves jointly and severally bound to the City of Brisbane in the sum of:

_____ Dollars
Words

($) to be paid to said City if the bid of the undersigned principal for construction of the **Roof-Mounted Photovoltaic System**, shall be accepted and the proposed contract awarded to said principal, and the said principal shall fail to execute the contract and furnish the bonds required in connection therewith; otherwise, this obligation to be void.

WITNESS our hands this _____ day of _____, 20____

(SEAL) By (Principal)_____

Title _____

Surety _____

(SEAL) Attest By_____

Title _____

Address_____

Telephone No. _____

Roof-Mounted Photovoltaic System

BID SCHEDULE

Item No.	Description	Est. Qty.	Unit	Unit Cost	Total Cost
1.	**Photovoltaic System Design and Permitting @** _____ _____ Dollars (Lump Sum)	1	LS	$_____	$_____
2.	**Plans and Specifications** Production of final plans and specifications suitable for field installation @ _____ _____ Dollars (Lump Sum)	1	LS	$_____	$_____
3.	**Install photovoltaic system @** _____ _____ Dollars (Lump Sum)	1	LS	$_____	$_____
4.	**System start-up and troubleshooting @** _____ _____ Dollars (Lump Sum)	1	LS	$_____	$_____
5.	**System Maintenance Contract** Full inspection and required maintenance of the installed system @ _____ _____ Dollars (Per Year)	5	PY	$_____	$_____

TOTAL AMOUNT OF BID ITEMS NO. 1 - 5: $_____

Notes:

1. In making the final ranking of bidders, the Owner will consider the total amount of all bid items and may take into consideration the expected yearly system production over a 20-year period, which information is required to be submitted with the proposal per paragraph 14 of Information Required of the Bidder.

2. The Owner reserves the right to reject any or all proposals.

3. If any discrepancy between Unit Cost and Total Cost is found, the product of "Est. Qty." and "Unit Cost" will prevail.

4. All prices shall include all taxes, licenses, insurance, transportation, charges and duties, etc., for the Work, complete in place.

INFORMATION REQUIRED OF THE BIDDER

1. Name _____
2. Address _____
3. Telephone _____
4. Fax _____
5. Type of firm - Corporation, Partnership or Individual _____
6. Corporation organized under laws of the State of _____
7. Names and addresses of all partners or names and titles of all officers of the corporation:

Officer's Name and Address	**Title**

8. List projects completed by bidder within the past five years, which are comparable in scope and size to the project, specified herein. Include reference information for these projects and contact persons in tabular form as shown in (or similar to) the table below. Attach additional sheets if necessary.

Project	Year	Location	Contact	Phone

INFORMATION REQUIRED OF THE BIDDER

Replies to these inquiries must be full and explicit where applicable.

9. When, by whom, and in what manner was the site of this proposed work inspected on behalf of the bidder.

_____

_____

_____

10. The bidder shall herein set forth the name and the location of the place of business of each subcontractor who will perform work or labor or render service to the General Contractor in or about the construction of the work or improvement in an amount in excess of one-half (½) of one percent (1%) of the General Contractor's total bid, and the portion of the work which will be done by each such subcontractor. (See GC-05,b., of the General Conditions herein) Attach additional sheets if necessary.

Name of Subcontractor	Location of Main Office	Subcontractor's DIR PWCR registration number and expiration date	Portion of work to be Done

INFORMATION REQUIRED OF THE BIDDER

11. Give the name and address of the manufacturer and/or fabricator, as applicable, from whom the following items will be purchased:

Item Description	Supplier or Manufacturer	Supplier or Manufacturer Telephone

12. Name, Address, Telephone Number and Contact Person of Surety or Sureties that have agreed to furnish Faithful Performance, Payment and Guaranty Bonds.

_____

_____

_____

_____

13. Bidder's DIR Registration Number and Expiration Date.

_____

14 On an attached sheet, indicate the expected yearly system production in kWH, with associated yearly degradation, for a 20-year period.

NONCOLLUSION AFFIDAVIT

TO BE EXECUTED BY BIDDER AND SUBMITTED WITH BID

STATE OF CALIFORNIA)
) ss
COUNTY OF)

_____,being first duly sworn, deposes
(Name)

and says that he or she is the _____
(Title)

of _____, the party making
(Name of Bidding Entity)

the foregoing bid, that the bid is not made in the interest of, or on behalf of, any undisclosed person, partnership, company, association, organization, or corporation; that the bid is genuine and not collusive or sham; that the bidder has not directly or indirectly induced or solicited any other bidder to put in a false or sham bid, and has not directly or indirectly colluded, conspired, connived, or agreed with any bidder or anyone else to put in a sham bid, or that anyone shall refrain from bidding; that the bidder has not in any manner, directly or indirectly, sought by agreement, communication, or conference with anyone to fix the bid price of the bidder or any other bidder, or to fix any overhead, profit, or cost element of the bid price, or of that of any other bidder, or to secure any advantage against the public body awarding the contract of anyone interested in the proposed contract; that all statements contained in the bid are true; and, further, that the bidder has not, directly or indirectly, submitted his or her bid price or any breakdown thereof, or the contents thereof, or divulged information or data relative thereto, or paid, and will not pay, any fee to any corporation, partnership, company, association, reorganization, bid depository, or to any member or agent thereof to effectuate a collusive or sham bid.

Executed at _____, California, on the

_____day of _____, 20____.

_____
(Name and Title) for

_____
(Entity)

_____
(Signature)

SUBSCRIBED and sworn to before me this_____ day of

_____, 20____

_____
Notary Public

AGREEMENT

THIS AGREEMENT, made and entered into this _____day of _____in the year two thousand _____, by and between the City of Brisbane, hereinafter designated as the City, party of the first part, and

_____,

hereinafter designated as the Contractor, party of the second part.

WITNESSETH: That the parties hereto do mutually agree as follows:

ARTICLE I. For and in consideration of the payments and agreements hereinafter mentioned to be made and performed by the City, the Contractor agrees with the City to design and construct **Roof-Mounted Photovoltaic System**, and to perform and complete in good and workmanlike manner all the work pertaining thereto shown on the details and exhibits and described in the specifications hereto attached, to furnish at his or her own proper cost and expense all tools, equipment, labor and materials necessary therefore, except such materials as in the said specifications are stipulated to be furnished by the City, and to do everything required by this Agreement and the said specifications, details and exhibits.

ARTICLE II. For furnishing all said materials and labor, furnishing and removing all plant, temporary works or structures, tools and equipment, and doing all the work contemplated and embraced in this Agreement; also for all loss and damage arising out of the nature of the work aforesaid, or from the action of the elements, or from any unforeseen difficulties which may arise or be encountered in the prosecution of the work until its acceptance by the City, and for all risks of every description connected with the work; also for all expense such as in the said specifications are expressly stipulated to be borne by the City; and for well and faithfully completing the work and the whole thereof, in the manner shown and described in the said specifications, details, exhibits, and in accordance with the requirements of the Engineer under them, the City will pay and the Contractor shall receive in full compensation therefore the prices named in the Bid Schedule of the Proposal hereto attached, that is $_____ Dollars.

ARTICLE III. The City hereby promises and agrees with the said Contractor to employ, and does hereby employ the said Contractor to provide the materials and to do the work according to the terms and conditions herein contained and referred to, for the prices aforesaid, and hereby contracts to pay the same at the time, in the manner and upon the conditions set forth in the specifications; and the said parties for themselves, their heirs, executors, administrators, successors, and assigns, do hereby agree to the full performance of the covenants herein contained.

ARTICLE IV. The Notice Inviting Bids, the Instructions to Bidders, the Proposal, the General Conditions, the Detail Specifications, and the Bonds, all of which are hereto attached, are hereby incorporated and made a part of this Agreement.

IN WITNESS WHEREOF: The parties hereto have caused the contract to be executed the day and year first above written.

CITY OF BRISBANE

(City Seal)

By:_____

Lori S. Liu, Mayor

Attest:

_____
Ingrid Padilla, Interim City Clerk

Contractor_____

By:_____

Title_____

Attest By:_____

Title_____

Approved as to Form and Execution:

(Corporate Seal)

_____
Michael Roush, City Attorney

BOND FOR FAITHFUL PERFORMANCE

LET THE FOLLOWING BE KNOWN:

That we, _____

hereinafter referred to as "Contractor," as principal, and _____

_____

as surety, are held firmly bound unto the City of Brisbane, in the sum of

_____

_____dollars,

($_____), lawful money of the United States of America, for the payment of which sum, well and truly to be made, we bind ourselves, jointly and severally, firmly by these presents.

The condition of the foregoing obligation is such that,

WHEREAS, said Contractor has been awarded and is about to enter into the annexed contract with the City of Brisbane for the **Roof-Mounted Photovoltaic System**, and is required by said City to give this bond in connection with the execution of said contract;

NOW, THEREFORE, if the said Contractor shall well and truly do and perform all of the covenants and obligations of said contract on his or her part to be done and performed at the times and in the manner specified therein, then this obligation shall be null and void, otherwise it shall be and remain in full force and effect;

PROVIDED, that any alterations in the work to be done, or the material to be furnished, which may be made pursuant to the terms of said contract, shall not in any way release either the Contractor or the surety thereunder, nor shall any extensions of time granted under the provisions of said contract release either the Contractor or the surety, and notice of such alterations or extensions of the contract is hereby waived by the surety.

BOND FOR FAITHFUL PERFORMANCE (Cont'd.)

WITNESS our hands this _____ day of _____, 20____.

Contractor_____

(Seal)

By_____

Title_____

Attest By_____

Title_____

Surety_____

By _____

(Seal)

Attorney-in-Fact
Mailing Address and Telephone:
(Attach Notarization)

_____

_____

_____

Approved as to Form and Execution

_____
Michael Roush, City Attorney

(Attach Power of Attorney)

PAYMENT BOND

LET THE FOLLOWING BE KNOWN:

That we,_____

_____

as principal, and _____

_____

as surety, are held and firmly bound unto the City of Brisbane, in the sum of

_____Dollars

($_____), lawful money of the United States of America, for the payment of which sum, well and truly to be made, we bind ourselves, jointly and severally, firmly by these presents.

The conditions of the above obligation is such that:

WHEREAS, said principal has been awarded and is about to enter into the annexed contract with the City of Brisbane to construct the **Roof-Mounted Photovoltaic System**, and is required by said City to give this bond in connection with the execution of said contract;

NOW, THEREFORE, if said principal as Contractor in said contract, or said principal's subcontractors, fails to pay for any materials, provisions, or other supplies, or equipment, used in, upon, for or about the performance of the work contracted to be done, or for any work or labor thereon of any kind, or for amounts due under the Unemployment Insurance Act with respect to such work or labor, said surety will pay for the same, in an amount not exceeding the sum specified above, and also, in case suit is brought upon this bond, a reasonable attorney's fee, to be fixed by the court. This bond shall insure to the benefit of any and all persons entitled to file claims under Section 1192.1 of the Code of Civil Procedure of the State of California.

PROVIDED, that any alterations in the work to be done, or the material to be furnished, which may be made pursuant to the terms of said contract, shall not in any way release either the Contractor or the surety thereunder, nor shall any extensions of time granted under the provisions of said contract release either the Contractor or the surety, and notice of such alterations or extensions of the contract is hereby waived by the surety.

PAYMENT BOND (Cont'd.)

WITNESS our hands this _____ day of _____, 20___.

Principal_____

(Seal)

By_____

Title_____

Attest: By_____

Title_____

Surety_____

By_____

(Seal)

Attorney-in-Fact
Mailing Address and Telephone

_____

_____

_____

Approved as to Form and Execution:

_____
Michael Roush, City Attorney

(Attach Attorney-in-Fact Affidavit)

GENERAL CONDITIONS

GC-01. Definitions.

a. Whenever the words defined in this article, or pronouns used in their stead, occur in these specifications or in any of the other contract documents, they shall have the meanings here given.

b. The word OWNER or CITY shall mean the City of Brisbane acting through its City Council and/or City Manager, as appropriate, each operating directly or through the duly authorized Engineer or other agents or employees.

c. The word DESIGN ENGINEER, whenever not qualified, shall mean O'Mahony & Myer.

d. The word ENGINEER shall mean the City's Director of Public Works/City Engineer or the Engineer's duly authorized representative, acting either directly or through properly authorized agents, such agents acting severally within the scope of the particular duties entrusted to them.

e. The word CONTRACTOR shall mean the party of the second part entering into contract with the Owner for the performance of work required by these specifications and the legal representative of said party, or the agent appointed to act for said party in the performance of the work. Said party is referred to throughout the contract documents as if of the singular number.

f. The word SUBCONTRACTOR shall mean any person, firm or corporation performing work or labor or rendering service to the general contractor in or about the construction of the work or improvement in an amount in excess of one-half (½) of one percent (1%) of the general contractors total bid.

g. The word CLAIM shall mean a separate demand by the Contractor for (1) a time extension, (2) payment of money or damages arising from work done by or on behalf of the Contractor pursuant to the contract for a public work and payment of which is not otherwise expressly provided for or the Contractor is not otherwise entitled to, or (3) an amount the payment of which is disputed by the Owner.

h. The words STANDARD SPECIFICATIONS shall mean the latest edition of the publication entitled "Standard Specifications for Public Works Construction," applicable amendments thereto, as written and promulgated by the Joint Cooperative Committee of the Southern California Chapter, American Public Works Association and Southern California District, Associated General Contractors of California. Reference may also be made to the Standard Specifications of the State of California Department of Transportation (latest edition).

i. Whenever in these specifications reference is made to a Federal, State or local specification, standard or regulation, or to a specification or standard issued by the American National Standards Institute (ANSI), the American Society for Testing and Materials (ASTM), the American Waterworks Association (AWWA) or other recognized body it shall be understood to mean the latest edition or amendment whether definitive or tentative together with any appendices.

j. The figure given in the specifications or upon the details and exhibits after the word Elevation, or an abbreviation of it, shall mean distances in feet above the datum, as established by the Owner. This datum is mean sea level according to the best information available.

GC-02. Contract Documents Complementary.

The Notice Inviting Bids, the Instructions to Bidders, the Proposal and Bid Schedule, the General and Special Conditions, the Project Drawings and Detail Specifications, together with the Bonds and Agreement, constitute the Contract. These contract documents are complementary, and what is called for in any one shall be as binding as if called for in all. The intention of the documents is to require a complete and finished piece of work including all labor, materials, equipment and transportation necessary for the proper execution of the work, with the exception of such items as are definitely stipulated in the specifications, details and exhibits to be furnished by the Owner. Anything shown in the details and exhibits, and not in the specifications, or in the specifications and not in the details and exhibits, or neither in the specifications nor in the details and exhibits, but necessary to properly complete the structure in accordance with the law and governmental rules and regulations, shall be performed by the Contractor as though shown in both the details and exhibits and the specifications. Material or work described in words that so applied have a well-known technical or trade meaning shall be held to refer to such recognized standards.

GC-03. Time and Order of Work.

a. The Contractor shall at all times employ such force, plant, materials, and tools as will be sufficient, in the opinion of the Owner to prosecute the work at not less than the rates fixed under the terms of the contract and to complete the work or any separable portions thereof within the time limits therein fixed. If the Contractor shall fail to employ sufficient force, plant, materials and tools or to maintain adequate progress he or she may, after such failure, be required to increase his or her progress at any point or points or to modify his or her plans and procedure in such manner and to such extent as the Owner may direct. No extension of time shall be made for ordinary delays and accidents and the occurrence of such shall not relieve the Contractor from the necessity of maintaining the required progress. In case of extension by the Owner of the time for the completion of the contract, as hereinafter provided, a revised schedule of progress may be prescribed in accordance with such extension of time.

b. The time in which the various portions and the whole of the contract are to be performed, and the work is to be completed, is of the essence of the contract.

GC-04. Assignment Forbidden.

a. The Contractor shall not assign, transfer, convey, sublet, or otherwise dispose of this contract, or of his or her right, title or interest in or to the same or any part thereof, without the previous consent in writing of the Owner and he or she shall not assign, by power of attorney or otherwise, any of the moneys to become due and payable under the contract unless by and with the like consent signified in like manner. If the Contractor should without such previous written consent, assign, transfer, convey, sublet, or otherwise dispose of the contract, or of his or her right, title or interest therein, or of any of the moneys to become due under the contract, to any other person, company, or other corporation, the contract may at the option of the Owner be terminated, revoked, and annulled, and the Owner shall thereupon be relieved and discharged from any and all liability and obligations growing out of the same to the Contractor, and to his or her assignee or transferee.

b. No right under the contract, nor any right to any money to become due hereunder, shall be asserted against the Owner in law or equity by reason of any so-called

assignment of the contract, or any part thereof, or by reason of the assignment of any moneys to become due hereunder, unless authorized as aforesaid by the written consent of the Owner.

GC-05. Subcontracts.

a. In the discretion of the Owner and subject to the provisions of subsection b., hereof, subcontracts may be permitted to such extent, and only to such extent, as shall be shown to be necessary or definitely advantageous to the principal contractor in the prosecution of the work, and without injury to the interests of the Owner. The resubletting of work by a subcontractor shall be subject to the same limitations as an original subletting. In general, the broking of work will not be favored, and the subletting of the entire contract, or of substantial complete units of it, will be permitted only upon an adequate showing of necessity, involving some new condition not reasonably foreseeable at the time of proposal. No subcontract will be permitted which has the effect of avoiding the residence or wage requirements or any other provisions of the main contract. Individual subcontracts, or members of contracting or subcontracting organizations, personally engaged upon the work, shall be subject to all the requirements of GC-44 to GC-47, inclusive, GC-53 and GC-54 hereof, and to all other conditions of these specifications applicable to employees working for wages.

b. Reference is hereby made to the provisions of Chapter 2 of Division 5, Title I of the Government Code of the State of California. As required by the provisions of said Chapter 2, each bidder shall set forth in his or her proposal the name and location of the place of business of each subcontractor who will perform work or labor or render service to the general contractor in or about the construction of the work or improvement in an amount in excess of one-half (½) of one percent (1%) of the general contractor's total bid, and the provisions of said Chapter 2. Notwithstanding the provisions of said Chapter 2 and the Contractor's compliance therewith, the Owner's acceptance of his or her bid shall not constitute authority to the Contractor to sublet or subcontract any of the work to any subcontractor so named in the proposal, but permission to subcontract any portion of the work to any subcontractor so named in the proposal shall be within the discretion of the Owner, as provided in subdivision a., of this section.

c. A copy of each subcontract, if in writing, or if not in writing then a written statement signed by the Contractor giving the name of the subcontractor and the terms and conditions of such subcontract, shall be filed with the Owner before the subcontractor begins work. Each subcontract shall contain a reference to the agreement between the Owner and the Contractor, and the terms of that agreement and all parts thereof shall be made a part of such subcontract insofar as applicable to the work covered thereby. Such subcontract shall provide for its annulment by the Contractor at the order of the Owner if in the Owner's opinion the subcontractor fails to comply with the requirements of the principal contract insofar as the same may be applicable to his or her work. Nothing herein contained shall create any contractual relation between any subcontractor and the Owner or to relieve the Contractor of any liability or obligation hereunder.

GC-06. Notice to Discontinue Work Under Contract.

a. If the work to be done under the contract shall be abandoned by the Contractor, or if the Contractor shall make a general assignment for the benefit of his or her creditors or be adjudicated a bankrupt, or if a receiver of his or her property or business be appointed by a court of competent jurisdiction, or if this contract shall be assigned by him or her otherwise as hereinbefore specified, or if at any time the Owner shall be of the opinion that the

performance of the contract is unnecessarily or unreasonably delayed, or that the Contractor is willfully violating any of the conditions or covenants of the contract, or of the specifications, or is executing the same in bad faith or not in accordance with the terms thereof, or if the work be not fully completed within the time named in the contract for its completion, or within the time to which the completion of the contract may have been extended, as hereinbefore provided, the Owner may by written notice instruct the Contractor to discontinue all work, or any part thereof, under this contract.

b. When such written notice is served upon the Contractor as hereinafter provided in Sec. GC-07, he or she shall immediately discontinue the work or such part thereof as is covered by the Notice, and shall not resume the same except by written instructions from the Owner. In any such case, the Owner may take charge of the work and complete it by a new contract or by force account. The Owner may procure other materials and provide labor for the completion of the same, or contract therefore, and charge the expenses of completion by either method to the Contractor. These charges shall be deducted from such moneys as may be due or may at any time hereinafter become due the Contractor under and by virtue of this contract, or any part hereof. In case such expense shall exceed the amount which would have been due the Contractor under the contract if the same had been completed by him or her, he or she shall pay the amount of such excess to the Owner; and in case such expenses shall be less than the amount which would have been payable under this contract if the same had been completed by the Contractor, he or she shall have no claim to the difference except to such extent as may be necessary, in the opinion of the Owner, to reimburse the Contractor or the Contractor's sureties for any expenses, properly incurred for plant, camp, equipment, materials, supplies, and labor devoted to the prosecution of the work, of which the Owner shall have received the benefit and which shall not have been otherwise paid for by the Owner. When any particular part of the work is being carried on by the Owner, by contract or otherwise, under the provisions of this section, the Contractor shall continue the remainder of the work in conformity with the terms of his or her contract, and in such manner as in no wise to hinder or interfere with the persons or workmen employed as above provided, by the Owner, by contract or otherwise, to do any part of the work, or to complete the same under the provisions of this section.

GC-07. Termination of Contract.

a. If at any time before completion of work under the contract, it shall be found by the Owner that reasons beyond the control of the parties thereto render it impossible or against the interest of the Owner to complete the work contracted to be done; or if the work shall have been prevented or suspended by injunction issued by a court of competent jurisdiction or by any other order of constituted authority for a period in excess of 30 consecutive days; the Owner may at any time, by written notice to the Contractor, discontinue the work and terminate the contract; or if the entire work shall have been suspended for a period in excess of 60 consecutive days and termination is demanded in writing by the Contractor, the contract shall be discontinued. Upon the service of such notice of termination, the Contractor shall discontinue the work in such manner, sequence and at such times as the Owner may direct, continuing and doing after said notice only such work and only until such time or times as the Owner may direct; and the Contractor shall have no claim for damages for such discontinuance or termination of the contract; nor shall the Contractor have any claim for anticipated profits on the work thus dispensed with, nor any other claim except for the work actually performed up to the time of complete discontinuance including any extra work ordered by the Owner to be done under Section GC-12 after the date of said order.

b. Completion of Contract. In the event that the work shall be so discontinued and the contract terminated, the satisfactory completion of such work as the Owner may thereafter direct and satisfactory compliance with the terms of said order shall be deemed the completion of the work specified in this contract; and the final estimate shall be of the amount of the work completed to the time of such discontinuance and termination, together with such other sum or sums as may be due the Contractor in accordance with the provisions of this section.

c. Termination by the Owner for Convenience. The Owner reserves the right to terminate the Work for its Convenience, without any cause, upon ten (10) days notice in writing to the Contractor. Upon receipt of written notice from the Owner of such termination for the Owner's convenience, the Contractor shall:

(1) Cease operations as directed by the Owner in the notice;

(2) Take actions necessary, or that the Owner may direct, for the protection and preservation of the Work; and

(3) Except for Work directed to be performed prior to the effective date of termination stated in the notice, terminate all existing Subcontractors and purchase orders and enter into no further Subcontracts and purchase orders.

In the event the Owner terminates for Convenience, the Contractor shall be paid for at its actual costs for the portion of the Work performed to the date of termination and for all costs of termination, including demobilization and any termination charges by vendors and subcontractors, plus ten (10) percent of the Contractor's actual termination costs for overhead and profit.

GC-08. Legal Address of Contractor.

a. The address given in the Contractor's proposal on which the contract is founded is hereby designated as the place to which all notices, letters and other communications to the Contractor shall be mailed or delivered. The delivering at the above named place or the depositing in a pre-paid wrapper directed to the above place, in any post office mail box regularly maintained by the post office, of any notice, letter or other communication to the Contractor, shall be deemed sufficient service thereof upon the Contractor and the date of said service shall be the date of such delivery or mailing. Such address may be changed at any time by a written notice signed by the Contractor and delivered to the Owner.

b. Nothing therein contained shall be deemed to preclude or render inoperative the service of any notice, letter, or other communication upon the Contractor personally.

GC-09. Additional Surety.

If during the continuance of the contract any of the sureties upon the faithful performance bond in the opinion of the Owner are or become insufficient, he or she may require additional sufficient sureties which the Contractor shall furnish to the satisfaction of the Owner within 15 days after notice, and in default thereof the contract may be suspended and the work completed as provided in Section GC-06 hereof.

GC-10. Authority of the Engineer.

The Engineer shall interpret all orders and directions contemplated under the contract; shall determine all questions in relation to said work and the construction thereof; and shall decide in all cases every question which may arise relative to the fulfillment of this contract on the part of the Contractor. Should any discrepancy appear or any misunderstanding arise as to the import of anything contained in the specifications, details, or exhibits, the matter shall be referred to the Engineer, who shall decide the same in accordance with the true intent and meaning as construed by him, and his or her decision shall be binding on the Contractor. Any differences or conflicts which may arise between the Contractor and other contractors of the Owner in regard to their work shall be adjusted and determined by the Engineer.

GC-11. Changes.

a. If the Owner finds it impracticable to comply strictly with these specifications, the Owner may prescribe a modification of requirements or of methods of work; and for such purposes the Owner may, at any time during the life of the contract, by written order make such changes as he or she shall find necessary in the design, line, grade, form, location, dimensions, plan or material of any part of the work or equipment hereinafter specified, or in the quantity or character of the work or equipment to be furnished. If such changes increase or diminish the quantity or amount of work to be done, they shall not constitute the basis for a claim for damages or anticipated profits on the work that may be dispensed with; provided, that if such changes or alterations render useless any work already done or materials already furnished or used in the work, the Owner shall make reasonable allowance therefore, which action shall be binding upon both parties.

b. In the event of increasing or decreasing work, the total amount of work actually done or materials or equipment furnished shall be paid for according to the unit price established for such work under the contract, wherever such unit price has been established. In the event no prices are named in the contract to cover such changes or alterations, the cost of such changes shall be covered as hereinafter provided for extra work.

c. Any disputes regarding payment for changes in the work or for extra work, or regarding extensions of time, shall proceed in accordance with the procedures set forth in the General Conditions section entitled "Claims".

GC-12. Extra Work.

a. If during the performance of the contract it shall in the opinion of the Owner become necessary or desirable for the proper completion of the contract to order work done or materials or equipment furnished which in the opinion of the Owner are not susceptible of classification under the unit-price items named in the Bid Schedule, and are not included in any item for which a lump sum is bid, the Contractor shall do and perform such work and furnish such materials and equipment. Such labor, materials, and/or equipment will be classed as extra work and shall be ordered in writing before such work is started. No extra work shall be paid for unless ordered in writing.

b. Extra work and material will ordinarily be paid for at a lump sum or unit price agreed on in writing by the Owner and the Contractor before the extra work shall be ordered.

c. Performance of any extra work or the furnishing of any extra material which, in the judgment of the Owner is of like character to and susceptible of classification under

the unit-price items of the contract as specified shall, if the order of the Owner shall be provided, be paid for at the unit price named for such work in the Bid Schedule.

d. Whenever, in the judgment of the Owner, such extra work or such extra material, as the case may be, is not of like character to and susceptible of classification under the unit-price items of the contract as specified, and it is impracticable because of the nature of the work or for any other reason to fix the price before the extra work order shall be issued, extra work and material, when furnished by the Contractor, shall be paid for at actual necessary costs of materials, supplies, labor (including foreman's wages) at the job site, workers' compensation insurance contributions made to the State as required by the provisions of the Unemployment Insurance Act, Chapter 352, Statutes of 1935, as amended, taxes paid to the Federal Government as required by the Social Security Act, approved August 14, 1935, as amended, and the reasonable value of the use of equipment for the actual time it is used, all as determined by the Owner, and in accordance with Section 9-1.03 of the Standard Specifications, which shall include: general expenses, excise taxes, property taxes, bond premiums, license and inspection fees imposed by any governmental authority and all other items of expense, whether of the kind enumerated herein or otherwise.

e. If any work or materials ordered under this section on a cost-plus basis, the Contractor shall, at the times directed during the performing of the work or the furnishing of the materials, render to the Owner written reports in prescribed form, showing the name and number of each workman employed thereon, the number of hours employed thereon at the job site, the character of work he or she is doing, and the wages paid or to be paid to him, also showing the materials delivered and any other items that may enter into the cost, the quantity and character of each such material, from whom purchased and the net amount paid or to be paid therefore, and such other information as directed. If required, the Contractor shall produce any books, vouchers, other records, or memorandum that will assist the Owner in determining the true, necessary cost of work and materials to be paid for.

f. Any extra work performed hereunder shall be subject to all of the provisions of the contract and the Contractor's sureties shall be bound with reference thereto as under the original contract.

GC-13. Suspension of Work - Extension of Time.

a. The Owner reserves the right of suspending the whole or any part of the work herein contracted to be done, if it shall deem it for the interest of the Owner to do so. If the said work shall be delayed in consequence of such suspension or of any act or omission of the Owner, or by strikes, acts of God, or other unforeseeable causes beyond the control and without the fault or negligence of the Contractor, or his or her subcontractors, the Contractor shall be entitled to so much additional time where to perform and complete the contract on his or her part as the Owner shall certify in writing to be just. When delay is caused by an order to suspend work given on account of climatic condition that could have been reasonably foreseen, the Contractor shall not be entitled to any extension of time on account of such order.

b. Applications for extension of time must be made promptly in writing, stating cause. No delay shall be made on the basis in any application for extension of time, unless such delay and the causes thereof shall have been called to the attention of the Owner in writing within the 30 days immediately following the end of such delay. Applications for extension of time shall be addressed to the Owner.

c. Any dispute regarding an extension of time shall proceed in accordance with the procedures set forth in the General Conditions section entitled "Claims".

GC-14. Delays - No Extra Compensation.

Except when in the judgment of the Owner direct and unavoidable extra cost to the Contractor is caused by the failure of the Owner to provide necessary right-of-way, or site for installation, unless otherwise specifically provided in the detail specifications, the Contractor shall receive no compensation on account of any suspension of work either in whole or in part or for any other delay or hindrance herein mentioned. Where such extra compensation is claimed a written itemized statement setting forth in detail the amount thereof shall be presented promptly by the Contractor, and in no case later than 30 days after the close of the month during which extra cost is claimed to have been incurred. Unless so presented, the claim shall be deemed to have been waived. Any such claim if found correct will be approved and the amount found due as actual extra cost shall be included in the next partial estimate made as provided in Sec. GC-33.

GC-15. Right-of-Way.

a. The right-of-way for the works to be constructed under these specifications will be provided by the Owner. Nothing herein contained, however, and nothing marked on the details and exhibits, shall be interpreted as giving the Contractor exclusive occupancy of the territory provided. When two or more contracts are being executed at one time on the same or adjacent land in such manner that work on one contract may interfere with that on another, the Owner shall decide which contractor shall cease work, and which shall continue, or whether the work on both contracts shall progress at the same time, and in means of access for the execution of another contract, such privilege of access or any other reasonable privilege may be granted by the Owner to the Contractor so desiring, to the extent, amount, in the manner, and at the times permitted. No such decision as to the method or time of conducting the work or the use of territory shall be made the basis of any claim for delay or damage, except as provided in Section GC-13 hereof.

b. Lands to be furnished by the Owner for construction operations, roads, and other purposes will be specifically shown on the details and exhibits or provided for in the Detail Specifications. Should the Contractor find it necessary to use any additional land for his or her purpose during the construction of the work, he or she shall provide for the use of such lands at his or her own expense.

GC-16. Obligations of Contractor.

a. The Contractor at his or her own sole cost and expense shall perform all labor and services and furnish all the materials, tools and appliances, except as hereinafter otherwise definitely provided, necessary or proper for performing and completing the work required by these specifications, in the manner and within the time stipulated in the Detail Specifications. He or she shall furnish, erect, maintain, and remove the construction plant and such temporary works as may be required.

b. If at any time before the commencement or during the progress of the work or any part of it, the Contractor's methods or appliances appear to the Owner to be unsafe, inefficient, or inadequate for securing the safety of the workmen, the quality of work required, or the rate of progress stipulated, he or she may order the Contractor to increase their safety and efficiency or to improve their character and the Contractor shall comply with such orders at his or her own expense; but neither the making of such demands nor the failure of the Owner to make such demands shall relieve the Contractor of his or her obligation to secure the safe

conduct of the work, the quality of work required and the rate of progress stipulated in the contract.

c. The Contractor alone shall be responsible for the safety, efficiency, and adequacy of his or her plant, appliances, and methods and for any damage which may result from their failure or their improper construction, maintenance, or operation. All the labor, services, and materials, shall be performed and furnished strictly pursuant to, and in conformity with the General Conditions of the Specifications, the Detail Specifications, and the lines and grades and other directions of the Owner as given from time to time during the progress of the work under the terms of the contract, and also in accordance with the details and exhibits and with working drawings to be furnished from time to time as provided herein.

d. The Contractor shall complete the entire work to the satisfaction of the Owner, and in accordance with the specifications, details and exhibits herein attached, at the prices fixed in the contract.

GC-17. Personal Attention.

The Contractor shall give his or her personal attention constantly to the faithful prosecution of the work, and shall be present, either in person or by a duly authorized and competent representative, on the site of the work, continually during its progress, to receive directions or instructions from the Owner. Whenever the Contractor is not present on any part of the work where it may be desired to give directions, orders may be given by the Owner, and shall be received and obeyed by the superintendent or foreman who may be in charge of the particular part of the work in reference to which orders are given.

GC-18. Protests.

If the Contractor considers any work demanded of him or her to be outside the requirements of the contract, or if he or she considers any record or ruling of the Owner or of any inspector to be unfair, he or she shall immediately upon such work being demanded or such record or ruling being made, ask for written instructions or decision, whereupon he or she shall proceed without delay to perform the work or conform to the record or ruling; but unless the Contractor finds such instruments or decisions satisfactory, he or she shall, within 10 days after receipt of same, file a written protest with the Owner, stating clearly and in detail his or her objections and the reason therefore. Except for such grounds of protest or objections as are made of record in the manner specified and within the time stated herein, the Contractor hereby waives all grounds for protests or objections to the records, rulings, instructions, or decisions of the Owner, and hereby agrees that as to all matters not included in such protests the records, instructions, and decisions of the Owner shall be final and conclusive. Such protests shall proceed in accordance with the procedures set forth in the General Conditions section entitled "Claims".

GC-19. Claims.

a. As provided in Article 1.5 of Chapter 1 of Part 3 of Division 2 of the Public Contract Code, claims by the Contractor shall be in writing and include the documents necessary to substantiate the claim. Claims must be filed with the Owner on or before the date of final payment.

b. For claims of less than $50,000 the Owner shall respond in writing to any written claim within forty-five (45) days of receipt of the claim, or may request, in writing, within

30 days of receipt of the claim any additional documentation supporting the claim or relating to defenses or claims the Owner may have against the Contractor. If additional information is thereafter required, it shall be requested and provided pursuant to this subdivision, upon mutual agreement of the Owner and the Contractor. The Owner's written response to the claim, as further documented, shall be submitted to the Contractor within 15 days after receipt of the further documentation or within a period of time no greater than that taken by the Contractor in producing the additional information, whichever is greater.

c. For Claims of over fifty thousand dollars ($50,000) and less than or equal to three hundred seventy-five thousand dollars ($375,000), the Owner shall respond in writing to all written claims within 60 days of receipt of the claim, or may request in writing, within 30 days of receipt of the claim, any additional documentation supporting the claim or relating to defenses or claims the Owner may have against the Contractor. If additional information is thereafter required, it shall be requested and provided pursuant to this subdivision, upon mutual agreement of the Owner and Contractor. The Owner's written response to the claim, as further documented, shall be submitted to the Contractor within 30 days after receipt of the further documentation, or within a period of time no greater than that taken by the claimant in producing the additional information or request documentation, whichever is greater.

d. If the Contractor disputes the Owner's written response, or the Owner fails to respond within the time prescribed, the Contractor may so notify the Owner, in writing, either within 15 days of receipt of the Owner's response or within 15 days of the Owner's failure to respond within the time prescribed, respectively, and demand an informal conference to meet and confer for settlement of the issues in dispute. Upon a demand, the Owner shall schedule a meet and confer conference within 30 days for settlement of the dispute.

e. If following the meet and confer conference the claim or any portion remains in dispute, the Contractor may file a claim pursuant to Government Code Section 900 et seq. and a lawsuit on the claim may be filed in the appropriate state court. The court is to order non-binding mediation, (unless waived by both parties) under strict time constraints (within 60 days following the filing of responsive pleadings). The parties are to select a mediator within 15 days and the mediation must be commenced within 30 days of the submittal to mediation.

f. If the matter remains in dispute, the case shall be submitted to judicial (non-binding) arbitration pursuant to Code of Civil Procedure Section 1141.10 et seq. If either party objects to the arbitrator's award, the matter can then go to trial <u>De Novo</u> in the trial court, subject to the usual rules of litigation.

GC-19.A. Public Contract Code (PCC) Section 9204 Summary

Claims submitted between 01-01-2017 and 01-01-2020.

Notwithstanding anything else to the contrary stated in the Information For Bidders (IFB) or the Contract Documents, all claims, regardless of dollar amount, submitted between January 1, 2017 and January 1, 2020 shall be governed by PCC Section 9204 and this section.

The following provisions and procedures shall apply:

a. For the purposes of this section, the term "Claim", "Contractor", "mediation", "Public Entity" "Public works project" and "Subcontractor" shall have the meaning provided for in PCC Section 9204.

b. Contractor shall submit each Claim (whether for a time extension, payment for money or damages) in writing and in compliance with PCC Section 9204. Contractor must include reasonable documentation to support each claim.

c. Upon receipt of a Claim, the City shall conduct a reasonable review and respond in writing within 45 days of receipt and shall identify in a written statement what portions of the claim are disputed and undisputed. Undisputed portions of the Claim shall be process and paid within 60 days of the written statement. Undisputed amounts not paid in a timely manner shall bear interest at 7% per annum. The City and Contractor may mutually agree to extend the 45 day response time.

d. If the City needs approval from the City Council to provide a written statement, the 45 days may be extended to 3 days following the next duly noticed public meeting pursuant to PCC Section 9204(d)(1)(C).

e. If the City fails to timely respond to a Claim or if Contractor disputes the City's response, Contractor may submit a written demand for an informal meet and confer conference with the City to settle the issues in dispute. The demand must be sent via registered or certified mail, return receipt requested. Upon receipt, the City shall schedule the conference within 30 days.

f. Within 10 business days following the informal meet and confer conference, the City shall submit to Contractor a written statement describing any issues remaining in dispute and that portion which is undisputed. Undisputed portions of the Claim shall be process and paid within 60 days of the written statement. Undisputed amounts not paid in a timely manner shall bear interest at 7% per annum. The issues remaining in dispute shall be submitted to non-binding mediation. If the City and Contractor mutually agree on a mediator, each party shall pay equal portions of all associated costs. If within 10 business days, the City and Contractor cannot agree on a mediator, each party shall select a mediator (paying all costs associated with their selected mediator), and those mediators shall select a qualified neutral third party to mediate the disputed issues. The City and Contractor shall pay equal portions of all associated costs of such third party mediator.

g. Unless otherwise agreed by the City and Contractor, any mediation conducted hereunder shall excuse any further obligation under Public Contract Code Section 20104.4 to mediate after litigation has commenced.

h. The City reserves all rights and remedies that it has pursuant to the Construction Contract, plans and specification, at law or in equity which are not in conflict with PCC 9204.

i. This Section shall be automatically extended if legislation is lawfully passed which extends the terms of Public Contract Code Section 9204 beyond January 1, 2020.

GC-20. Contractor's Responsibilities.

a. The Contractor shall bear all losses resulting to him or her on account of the amount or character of the work, or from any unforeseen obstructions or difficulties which may be encountered, or from any encumbrances on the line of the work, or because the nature of the ground in or on which the work is done is different from what is assumed or was expected or on account of the weather, floods or other causes and he or she shall assume the defense of, and indemnify and save harmless the Owner and their Engineer, officers and agents from all liability and claims of any kind arising from the negligence or willful misconduct of the Contractor or his or her agents.

b. The Contractor shall be responsible for the care of any material furnished by the Owner and for the care of all work until its completion and final acceptance, and he or she shall, at his or her own expense, replace damaged or lost material and repair damaged parts of the work, or the same may be done at his or her expense by the Owner. He or she shall remove from the vicinity of the completed work, all plant, buildings, rubbish, unused material, concrete forms, etc., belonging to him or her or used under his or her direction during construction, and in the event of his or her failure to do so, the same may be removed by the Owner at the expense of the Contractor.

c. The Contractor shall assume all risk and shall save harmless the Owner and their Engineer, officers and agents from any action caused by failure to provide an adequate environmental impact report where the inadequacy of such environmental impact report results in delaying the performance of said Contractor or any of his or her subcontractors.

GC-21. Contractor to Furnish Information.

Before proceeding with the erection of construction plant, including sheeting, bracing, and other temporary structures, the Contractor shall furnish the Owner with information and drawings of all such structures as may be required. Drawings and prints in such detail as may be required, of articles, machinery, or fabricated materials entering into permanent construction which are by these specifications required to be furnished by the Contractor and of which detailed drawings are not furnished by the Owner shall be submitted by the Contractor for approval and shall become the property of the Owner. Such approval shall not, however, operate to waive or modify any provision or requirement contained in these specifications.

GC-22. Specifications.

The Contractor shall keep on the work site a copy of the specifications and shall at all times give the Owner access thereto. The Contractor shall check all dimensions and quantities on the details, exhibits or schedules herein contained or given to him or her by the Owner, and shall notify the Owner of all errors therein which may be discovered by examining and checking the details and exhibits. He or she shall not take advantage of any error or omission in these specifications, or on the details, exhibits, or in schedules, as full instructions will be furnished by the Owner should such error or omission be discovered, and the Contractor shall carry out such instructions as if originally specified.

GC-23. Materials, Workmanship and Tests.

The Contractor shall submit samples, specimens, or test pieces of such materials to be furnished or used in the work as the Owner may require. All materials must be of the specified

quality and equal to approved sample, if samples have been submitted. All work shall be done and completed in a thorough, workmanlike manner, notwithstanding any omission from these specifications or the details or exhibits. The Contractor shall furnish without cost to the Owner such quantities of concrete, concrete aggregates, and other construction material as may be required for test purposes, and shall place at the Owner's disposal all available facilities for and cooperate with him or her in the sampling and testing of all materials and workmanship.

GC-24. Inspection.

All materials furnished and all work done under these specifications shall be subject to rigid inspection. Work done in the absence of prescribed inspection may be required to be removed and replaced under the proper inspection, and the entire cost of removal and replacement, including the cost of all materials furnished by the Owner and used in the work removed, shall be borne by the Contractor, irrespective of whether the removed work is found to be defective or not. Work covered up without the authority of the Owner shall, upon order of the Owner, be uncovered to the extent required, and the Contractor shall similarly bear the entire cost of performing all the work and furnishing all the materials necessary for the removal of the covering and its subsequent replacement, as directed and approved by the Owner. Whenever the Contractor arranges to work at night or at any time when work is not usually in progress, or to vary the period during which work is carried on each day, he or she shall give the Owner due notice so that inspection may be provided.

GC-25. Examination of Work.

The Contractor shall furnish the Owner every reasonable facility for ascertaining whether the work is in accordance with the requirements and intention of these specifications even to the extent of uncovering or taking down portions of finished work which have been previously approved or authorized to be covered. Should such previously approved work thus exposed or examined prove satisfactory, the uncovering or taking down and replacing of the covering or the making good of the parts removed, shall be included in the contract estimates and will be paid for at the contract prices for the kind of work done, or as extra work, as determined by the Owner; but should the work exposed or examined prove unsatisfactory, the uncovering, taking down, replacing and making good shall be at the expense of the Contractor, and he or she shall be charged with the cost to the Owner of any materials furnished by the Owner for the unsatisfactory work and its replacement in excess of the requirements for satisfactory original construction.

GC-26. Defective Work or Materials.

a. The inspection of the work shall not relieve the Contractor of any of his or her obligations to fulfill his or her contract as herein prescribed, and defective work shall be made good, and unsuitable materials may be rejected, notwithstanding that such work and materials have been previously overlooked by the Owner and accepted or estimated for payment.

b. If the work, or any part thereof, shall be found defective at any time before the final acceptance of the whole work, the Contractor shall forthwith make good such defect without compensation in a manner satisfactory to the Owner, and shall be charged as provided in the preceding section for any excess material furnished by the Owner; provided that in the event the Owner finds that the said defect necessitating the repair or removal of completed work

is due to the use of materials furnished by the Owner which were, when incorporated in the work, or have since become, unsatisfactory or unsuitable from causes for which the Contractor is not responsible, then the Owner shall pay under applicable contract items or as extra work for the placing, tearing out, removal from the vicinity, and replacing of such defective work or for its repair as ordered, and shall furnish without charge satisfactory materials to replace that previously furnished by the Owner.

c. If any materials furnished and brought upon the ground by the Contractor for use in the work, or selected for the same by him or her, shall be condemned by the Owner as unsuitable or not in conformity with the specifications, the Contractor shall forthwith discard such materials and remove them to a satisfactory distance from the vicinity of the work.

d. If the Contractor shall fail or neglect to make ordered repair of defective work or to remove condemned materials from the work within 10 days after the service by the Owner of an order to do such repair work or remove such materials, the Owner may make the ordered repairs or remove the condemned materials and deduct the cost thereof from any moneys due the Contractor.

GC-27. Right of Property in Materials.

Nothing in this contract shall be considered as vesting in the Contractor any right of property in materials used, after they have been attached or affixed to the work of the soil, but all such materials shall, upon being so attached or affixed, become the property of the Owner.

GC-28. Title to Materials Found on the Work.

The title to all water and to the right to use of all water, to all soil, stone, gravel, sand, minerals, and all other materials developed or obtained in the excavation or other operations by the Contractor or any subcontractor or any of their employees, and the right to use or dispose of the same, are hereby expressly reserved in the Owner and neither the Contractor, nor any subcontractor, nor any of their employees shall have any right, title, or interest in or to any part thereof, neither shall they, nor any of them, assert or make any claim thereto. The Contractor may be permitted to use in the work without charge any such materials that meet the requirements of these specifications.

GC-29. Access to Work.

The Owner, and the Engineer, their assistants, inspectors, agents, and other employees, shall at all times and for any purpose have access to the work and the premises used by the Contractor, and the Contractor shall provide safe and proper facilities therefore. Furthermore the Owner and the Engineer, their assistants, inspectors, and agents shall, at all times, have immediate access to all places of manufacture where machinery or materials are being manufactured, produced or fabricated for use under these specifications, and shall have full facilities for determining that all such machinery or materials are being made strictly in accordance with the specifications, details and exhibits. The Contractor shall, whenever so requested, give the Owner and the Engineer access to the proper invoices, bills of lading, etc., and shall provide scales and assistance for weighing, or assistance for measuring of the materials.

GC-30. Damages - Failure to Complete on Time.

The Contractor shall pay to the Owner all expenses, losses, and damages, as determined by the Owner, incurred in consequence of any defect, omissions, or mistake of the Contractor or his or her employees, or the making good thereof, and shall also pay for each and every day, including Sundays and legal holidays; that he or she shall be in default in completing the whole work to be done under this contract, or any separable part thereof, the sum or sums named in the Detail Specifications, which sum or sums are by the execution of the Agreement mutually agreed upon, not as a penalty, but as liquidated damages which the Owner will suffer by reason of default. The Owner shall have the right to deduct the amount of such damages from any moneys due or to become due the Contractor under this contract; provided, however, that the Owner shall have the right as provided in Section GC-13 hereof to extend the time for the completion of the work beyond the time stated in this contract. If the time for the completion of the work as aforesaid shall be extended by the Owner, then and in such case the Owner shall be fully authorized and empowered to deduct from the final estimate of the amount due the Contractor under the provisions of this contract the amount of any damages determined as heretofore stipulated for each day that the Contractor shall be in default, for the completion of the work or separable part thereof, beyond the date to which the time for said completion shall have been extended by the Owner. (See also Section GC-33). Permitting the Contractor to continue the work and finish the work, or any part of it, after the date to which the time fixed for the completion may have been extended, shall in no way operate as a waiver on the part of the Owner of any of its rights under this contract.

GC-31. Patents and Copyrights.

The Contractor shall hold and save the Owner, its Engineer, officers, agents, and employees, harmless from liability of any nature and kind, including costs and expenses, for or on account of any copyrighted or uncopyrighted composition, secret process, patented or unpatented invention, article, or appliance, manufactured, furnished, or used by him or her in the performance of this contract, including their use by the Owner, unless otherwise specifically stipulated in this contract.

GC-32. No Payment for Temporary Work.

No direct payment will be made to the Contractor for providing transportation, light, power, tools, and equipment or for furnishing, building, and maintaining camps, construction plant, access roads, sanitary conveniences, disposal work, water supply, fire protection, guards, trestles, telephone system, and other temporary works, or for the removal of all temporary structures, plant and materials, or for medical attendance or health protection, or for watchmen, magazine keepers or guards, or for any other service, thing, or material, unless payment therefore has been definitely provided. Compensation for all such services, facilities, thing, or materials necessary or required to execute the work in accordance with the provisions of the contract shall be considered as having been included in the prices stipulated for the appropriate items.

GC-33. Partial Estimates.

a. Unless otherwise specified in the section entitled "Special Conditions", partial estimates and subsequent partial payments shall be made in accordance with the procedures described herein.

b. In order to assist the Contractor to prosecute the work advantageously, the Owner shall, on or about the last day of each calendar month, except as provided in the section entitled "Partial Payments may be Withheld," make in writing, an estimate such as in its opinion shall be just and fair, of the amount and value of the work done by the Contractor up to that time in the performance of the contract.

c. In the case of work for which unit prices are named in the contract the estimate shall be computed on the basis of said unit prices. In the case of work for which a lump sum is named in the contract, the Owner may use the prices submitted by the Contractor in the "Bidder's Breakdown of Lump Sum Bid;" provided, that in case the prices submitted in said breakdown do not in the opinion of the Owner truly represent the actual relative costs of the different parts of the work, the Owner will prepare a schedule of prices which shall be used in estimating the value of the work performed; and provided further, if the Contractor was not required to submit such breakdown with his or her bid, the Owner will prepare a schedule of prices which shall be used in estimating the value of the work performed. To the figure thus arrived at shall be added any amounts due the Contractor for extra work and the amount of any approved claims for extra cost to the date of the progress estimate.

d. From the beginning of work under the contract until 50 percent of it has been completed, a deduction of 10 percent or such larger or smaller percentage as may be hereinafter stipulated in these specifications shall be made from the total thus computed, and from the remainder shall be further deducted any amounts due the Owner from the Contractor for supplies or materials furnished or services rendered and any other amounts that may be due the Owner under the terms of the contract. From the balance thus determined shall be deducted the amount of all previous payments and the remainder shall constitute the partial estimate for that month.

e. At any time after 50 percent of the work under the contract has been completed and progress satisfactory to the Owner is being made, the Owner, at its discretion, may continue to make such deduction as described in the foregoing paragraph or may make any of the remaining partial payments in full for the estimated value of the work completed during the period covered by each such payment. Further, if the Owner determines that the work is substantially complete and the amount of the retained percentage is in excess of the amount considered by him or her to be adequate for the protection of the Owner, the Owner may, at its discretion, release to the Contractor such excess amount.

f. Unless otherwise specifically provided in the Detail Specifications, no materials not incorporated in the work and none of the Contractor's plant shall be included in the partial estimates. Such partial estimates shall not be required to be made by strict measurement, but they may be made by measurement or by estimation, or partly by one method and partly by the other, and it shall be sufficient if they are approximate only.

GC-34. Partial Estimates May be Withheld.

The partial estimates provided for in the section entitled "Partial Estimates" and/or the payment thereof may, at any time, be withheld or deducted if, in the opinion of the Owner, the Contractor is not diligently and efficiently endeavoring to comply with the intent of the contract, or if the Contractor shall fail to pay his or her labor and material bills or sums due subcontractors as they become due.

GC-35. Partial Payments.

a. Within 21 days after the date each partial estimate is prepared by the Owner, as set forth in Section GC-33 hereof (unless payment be withheld as provided in Section GC-34 hereof), except as stipulated in subsection b., hereof, the Owner shall pay to the Contractor, the amount stated in such estimate to be due the Contractor; provided, however, that the Owner may at all times reserve and retain from such partial payments, or any of them, in addition to the retained percentage and other amounts above mentioned to be deducted in computing the partial estimates, any sum or sums which by the terms hereof, or of any law of the State of California it is or may be authorized or required to reserve or retain; and provided further, that no such partial estimate or payment shall constitute an acceptance of the work or any portion thereof. The percentage deducted as above set forth shall become due and payable with and as a part of the final payment to be made as hereinafter provided.

b. In the event work under the contract or any part thereof shall be discontinued as provided in Section GC-06, the said retained percentage shall become and be the property of the Owner to the extent necessary to repay the Owner any excess in the cost of the work above the contract price; and after issuance of notice to discontinue work, as therein provided, no payment upon partial estimates or otherwise shall thereafter be made the Contractor for the work covered by said notice until completion of the work and final settlement.

c. The Contractor shall have the option to substitute securities for any moneys withheld by the Owner as provided in Section GC-34 hereof. At the request and expense of the Contractor, securities equivalent to the amount withheld shall be deposited with the Owner, or with a state or federally chartered bank as the escrow agent, who shall pay such moneys to the Contractor upon satisfactory completion of the contract. Securities eligible for investment under this section shall include those listed in Section 16430 of the Government Code or bank or savings and loan certificates of deposit. The Contractor shall be the beneficial owner of any securities substituted for moneys withheld and shall receive any interest thereon. Any escrow agreement entered into pursuant to this section shall contain as a minimum, the following provisions.

(1) The amount of securities to be deposited;

(2) The terms and conditions of conversion to cash in case of the default of the Contractor; and

(3) The termination of the escrow upon completion of the contract.

d. Pursuant to §20104.50 of the Public Contract Code, should the Owner fail to make a partial payment within thirty days after receipt of the undisputed and properly submitted pay estimate from the Contractor, the Contractor is entitled to interest from the Owner at the then prevailing legal rate.

The payment request shall be reviewed by the Owner as soon as practicable after receipt for the purpose of determining that the payment request is proper. Any payment request determined not to be proper shall be returned to the Contractor not later than seven days after receipt by the Owner's Representative. Such returned requests shall be accompanied by a written explanation of the reasons why the payment request is not proper.

In the event a payment is rejected, all or in part, beyond the seven-day period after receipt, the number of days available to the Owner to make payment without incurring interest shall be reduced by the number of days by which the Owner exceeds the seven day return requirement set forth above.

GC-36. Final Estimate and Payment.

a. Whenever the Contractor shall deem all work under the contract to have been completed in accordance therewith, he or she shall so notify the Owner in writing and the Owner shall promptly ascertain whether such be the fact, and if not, shall advise the Contractor in detail and in writing of any additional work required. When the Contractor has complied with all provisions of the contract to the satisfaction of the Owner, he or she shall proceed with all reasonable diligence to measure all work done and all materials furnished under and in accordance with the contract, and shall make a final and complete estimate of the value of such work done and all materials furnished in conformance with the contract and shall certify to the Owner said estimate and the date of completion of the work. The Owner shall take prompt action thereon and shall furnish the Contractor and his or her surety with a statement of acceptance or of exceptions.

b. Within 10 days after the date of acceptance, the Owner shall cause to be filed, in the office of the county recorder of the county or counties in which the work is located, a notice of the completion of the work herein agreed to be done by the Contractor. Upon the expiration of 35 calendar days from the filing of such notice of completion of the work, the Owner shall pay to the Contractor the amount remaining after deducting from the amount of the Final Estimate, all such sums as shall theretofore have been paid to the Contractor under any of the provisions of the contract, and also any sum or all sums of money which by the terms hereof of the Owner is or may be authorized or required to reserve or retain. All prior certificates upon which partial payments have been made, being merely estimates, shall be subject to correction in the final certificate, which final certificate may be made without notice thereof to the Contractor or of the measurements upon which it is based. In the event that securities have been deposited with the Owner by the Contractor as provided in Section GC-35c hereof, at the time of the Final Payment as provided for herein, the Owner shall take appropriate action to release control of any such securities being held to insure performance.

GC-37. False or Erroneous Certificates.

Neither the Owner, nor any officer thereof, shall at any time either before or after the final completion and acceptance of the work and payment therefore pursuant to any return or certificate accepted by the Owner, under the provisions of this contract, be precluded or stopped by any return of certificate from showing the true and correct amount and character of the work done and materials furnished by the Contractor or any other person under this agreement, or from showing at any time that any such return or certificate is untrue and incorrect or improperly made in any particular, or that the work and materials, or any part thereof, do not in fact conform to the specifications; and the Owner shall not be precluded or stopped notwithstanding any such return or certificate and payment in accordance therewith, from demanding and recovering from the Contractor such damages as the Owner may sustain by reason of the Contractor's failure to comply with the specifications.

GC-38. Acceptance of Work not a Waiver.

Neither the acceptance by the Owner or by any of its employees, nor any order, measurements, or certificate, nor any payment for, or acceptance of the whole or any part of the work by the Owner or any of its officers, nor any extension of time, nor any possession taken by the Owner or its employees, shall operate as a waiver of any portion of this contract or of any power herein reserved to the Owner, or any right to damage herein provided; nor shall any waiver of any breach of this contract be held to be a waiver of any other or subsequent breach.

GC-39. Final Payment Terminates Liability.

a. No claim shall be made or be filed and neither the Owner, nor its Engineer or any of its agents shall be liable, or held to pay any money except as specifically provided in the contract.

b. The acceptance by the Contractor of the final payment aforesaid shall operate as and shall be a release to the Owner, its Engineer and agents, from all claim and liability to the Contractor for anything done, or furnished for, or relating to, the work or for any act or neglect of the Owner or for any person relating to or affecting the work, except the claim against the Owner for the remainder, if any there be, of the amounts kept or retained as provided in Section GC-41.

GC-40. Payment Only in Accordance with Contract.

The Contractor shall not demand or be entitled to receive payment for the work or materials or any portion thereof, except in the manner set forth in the contract; nor unless each and every one of the promises, agreements, stipulations, terms and conditions herein contained to be performed, kept, observed and fulfilled, and the Owner shall have accepted the work. Said final certificate of completion and acceptance shall be final and conclusive upon the Contractor.

GC-41. Moneys May be Retained.

The Owner may keep any moneys which would otherwise be payable at any time hereunder, and apply the same, or so much as may be necessary therefore, to the payment of any expenses, losses, or damages incurred by the Owner, for which the Contractor is liable under the contract.

GC-42. Unpaid Claims.

If, upon or before the completion of the work herein agreed to be performed or at any time prior to the expiration of the period within which claims or liens may be filed for record as prescribed by Section 1193.1 of the Code of Civil Procedure of the State of California, any person or persons claiming to have performed any labor or furnished any material, supplies, or services toward the performance or completion of this contract, or that they have agreed to do so, shall file with the Owner a verified statement of such claim, stating in general terms the kind of labor and materials and the name of the person to or for whom the same was done or furnished, or both, and the amount in value, as near as may be, of that already done or furnished, or both, and of the whole agreed to be done or furnished, or both, together with a statement that the same has not been paid, or if any person or persons shall bring against the Owner or against any officer or officers thereof any action to enforce such claim. The Owner shall until the discharge thereof withhold from the moneys under its control so much of said moneys due or to become due the Contractor under this contract as shall be sufficient to satisfy and discharge the amount in such notice or under such action claimed to be due, together with the costs thereof; provided, that if the Owner shall in its discretion permit the Contractor to file such additional bond as is authorized by Section 1192.1 of the Code of Civil Procedure, in a penal sum equal to one and one-fourth times the amount of said claim.

GC-43. Cost Statement.

The Contractor shall furnish the Owner promptly, upon completion of all the work, all information necessary to determine the cost of the work, including an itemized statement in a form satisfactory to the Owner of the actual cost of all labor, materials, rentals, repairs, compensation and other insurance, transportation of labor, equipment and materials, engineering or other special services, supervision, overhead, depreciation, and taxes properly chargeable against the work, and any and all cost entering into the work performed. The Contractor shall permit the Owner to have access to original payrolls, vouchers, and other records to the extent required to verify the figures given in said statement, and the Contractor shall not be entitled to receive payment on account of the final estimate hereinbefore provided for unless and until he or she shall furnish the Owner a satisfactory statement of the cost of the entire work.

GC-44. Laws and Regulations.

a. The Contractor shall keep himself fully informed of all laws, ordinances, and regulations in any manner affecting those engaged or employed on the work, or the materials used in the work, or in any way affecting the conduct of the work, and of all orders and decrees of bodies or tribunals having any jurisdiction or authority over the same. If any discrepancy or inconsistency should be discovered in this contract, or in the details, exhibits or specifications herein referred to, in relation to any such law, ordinance, regulation, order, or decree, he or she shall forthwith report the same in writing to the Owner. He or she shall at all times himself observe and comply with, and shall cause all his or her agents and employees to observe and comply with all such applicable laws, ordinances, regulations, orders, and decrees in effect or which may become effective before completion of this contract; and shall protect and indemnify the Owner, its officers, Engineer, and agents against any claim or liability arising from or based on the violation of any such law, ordinance, regulation, order, or decree, whether by himself or by his or her employees.

b. Except as otherwise explicitly provided elsewhere in these specifications, all permits and licenses necessary to the prosecution of the work shall be secured by the Contractor at his or her own expense, and he or she shall pay all taxes properly assessed against his or her equipment or property used or required in connection with the work.

GC-45. Payment of Wages.

The issuance as payment for wages of any evidence of indebtedness is prohibited unless the same is negotiable and payable on demand without discount. Wages must be paid at least semi-monthly on regular pay days established in advance, and shall include all amounts for labor or services performed by employees of every description. (See California Labor Code.)

GC-46. Eight-Hour Law.

Pursuant to the provisions of the California Labor Code, eight hours labor shall constitute a legal day's work and the time of service of any workman employed on the work shall be limited and restricted to eight hours during any one-calendar day. Work performed by Contractor's employees in excess of eight hours per day, and 40-hours during any one week will be permitted upon compensation for all hours worked in excess of eight hours per day at not less than one and one-half times the basic rate of pay. The Contractor shall forfeit as a penalty to the Owner $50.00 for each workman employed in the execution of this contract by him or her or

by any subcontractor under him or her, for each calendar day during which such workman is required or permitted to labor more than eight hours in violation of the provisions of said Labor Code.

GC-47. Overtime.

a. Overtime work, i.e. work in excess of eight hours in any one calendar day, or work performed on a Saturday, Sunday or other legal holiday shall not entitle the Contractor to any compensation for any contract item in addition to that stipulated in the contract for the kind of work performed, even though such overtime or legal holiday work may be required under emergency conditions by the Owner under the provisions of Section GC-12 hereof, no additional payment will be made to the Contractor because of the payment by him or her of overtime or legal holiday rates for such work, unless the use of overtime or legal holiday work in connection with such extra work is specifically ordered in writing by the Owner, and then only to such extent extra payment is regularly being made by the contractor to his or her workforce for overtime or legal holiday work of a similar nature in the same locality.

b. Overtime and shift work may be established as a regular procedure by the Contractor only with the written permission of the Owner. Such permission may be revoked at any time.

c. All costs for overtime inspection, except those occurring as a result of overtime and shift work established as a regular procedure, or work specifically ordered by the Owner on an overtime basis, shall be paid by the Contractor. Overtime inspection shall include inspection required during holidays, Saturdays, Sundays and any weekday between the hours of 6:00 p.m. and 7:00 a.m. Such costs will include but will not necessarily be limited to engineering, inspection, general supervision and other overhead expenses that are directly chargeable to the overtime work. All such charges shall be deducted by the Owner from payments due the Contractor.

GC-48. Prevailing Rates of Wages and Department of Industrial Relations Requirements.

a. All work performed under this contract is subject to compliance monitoring and enforcement by the Department of Industrial Relations. To engage in the performance of any work under this contract, the Contractor and his or her subcontractors must be registered and qualified to perform public work pursuant to Section 1725.5 of the Labor Code.

b. As determined by the Director of the Department of Industrial Relations, the Owner has on file at its headquarters office, the prevailing wages for general, holiday and overtime work to be performed by each craftsman or type of worker needed to execute the contract and has specified the same in the Notice Inviting Bids which is attached hereto and made a part of the contract. The Contractor shall forfeit as a penalty to the Owner, Fifty Dollars ($50.00) for each calendar day or portion thereof for each worker paid less than the prevailing wages for any work done under the contract by him or her or any sub-contractor on the work, in violation of the Labor Code.

c. Contractor shall post job site wage notices as prescribed by state regulations. The Contractor and his or her subcontractors shall also maintain accurate payroll records and provide access to those records, as set forth in Section 1776 of the Labor Code. The Contractor and his or her subcontractors shall furnish payroll records directly to the Labor Commissioner, as set forth in Section 1771.1 of the Labor Code.

GC-49. Interference with Fire Hydrants, Highways and Fences.

The Contractor shall so conduct his or her operations as not to close or obstruct any portion of any highway, road or street or prevent in any manner free access to fire hydrants until he or she has obtained permits therefore from the proper authorities. If any highway required to be kept open shall be rendered unsafe by the Contractor's operations he or she shall make such repairs or provide such temporary guards as shall be acceptable to the authorities having jurisdiction and to the Owner. Any highway or street maintenance or repair work required by local authorities in connection with necessary operations under this contract shall be performed by the Contractor at his or her own expense and cost. Fences subject to interference shall be kept up by the Contractor until the work is finished and then restored to their original condition.

GC-50. Other Rights-of-Way and Structures.

Except as otherwise specifically provided in the Detail Specifications, the Contractor shall not do any work that would affect any railway track, pipeline, telephone, telegraph or electric transmission line, irrigation ditch or other structure nor enter upon the right-of-way or other lands appurtenant thereto, until notified that the Owner has secured authority therefore from the proper companies or parties. Thereafter and before he begins such work, the Contractor shall give said companies or parties due notice of his or her intentions to do so, and he or she shall give said companies or parties convenient access and every facility for removing, shoring, supporting or otherwise protecting such tracks, lines, ditches or structures and for replacing same. The Contractor shall not be entitled to any extension of time or any extra compensation on account of any postponement, interference or delay caused by any such structures being on the site of the work except as provided in Sections GC-13 and GC-14 hereof.

GC-51. Public Safety.

During performance of the work the Contractor shall erect and maintain temporary fences, bridges, railings and barriers and shall take all other necessary precautions and place proper guards for the prevention of accidents; shall put up and keep suitable and sufficient lights and other signals and shall indemnify and save harmless the Owner, its Engineer, officers and agents and employees from all damage and costs which they may be put to by reason of injury to persons or property resulting from the Contractor's negligence or carelessness in the performance of the work, or in guarding the same, or from any improper materials, implements or appliances used in the construction, or by or on account of any act or omission of the Contractor or his or her agents.

GC-52. Trespass.

The Contractor shall be responsible for all damage or injury that may be caused on any property by trespass by the Contractor or his or her employees in the course of their employment, whether the said trespass was committed with or without the consent or knowledge of the Contractor.

GC-53. Character of Workmen.

None but skilled workmen shall be employed on the work requiring special qualifications. When required in writing by the Owner, the Contractor or any subcontractor shall discharge any person who is, in the opinion of the Owner, incompetent, unfaithful, disorderly or otherwise unsatisfactory, and shall not again employ such discharged person on the work except with the consent of the Owner. Such discharge shall not be the basis of any claim for compensation or damages against the Owner, its Engineer or any of its officers.

GC-54. Employment of Labor.

a. No convict labor shall be directly employed by the Contractor or any subcontractor in the performance of any work done under this contract.

b. In the employment of labor in the performance of this contract, the Owner desires that the Contractor and all subcontractors shall, wherever possible, give first consideration to residents of the political subdivision to which the Owner provides service.

c. The Contractor shall be responsible for compliance with Section 1777.5 of the California Labor Code relating to employment of Apprentices on Public Works.

GC-57. Antitrust Claims.

a. Upon entering into a public works contract or a subcontract to supply goods, services, or materials pursuant to a public works contract, the Contractor or subcontractor offers and agrees to assign to the Owner all rights, title, and interest in and to all causes of action it may have under Section 4 of the Clayton Act (15 U.S.C. Sec. 15) or under the Cartwright Act (commencing with Section 16700 of Chapter 2, Part 2 of Division 7 of the Business and Professions Code), arising from purchases of goods, services, or materials pursuant to the public works contract or the subcontract. This assignment shall be made and become effective at the time the Owner tenders final payment to the Contractor, without further acknowledgment by the parties.

b. If the Owner receives, either through judgment or settlement, a monetary recovery for a cause of action assigned under this section, the assignor shall be entitled to receive reimbursement for actual legal costs incurred and may upon demand, recover from the Owner any portion of the recovery, including treble damages, attributable to overcharges that were paid by the assignor but were not paid by the Owner as part of the bid price, less the expenses incurred in obtaining that portion of the recovery.

c. Upon demand in writing by the assignor, the assignee shall, within one year from such demand, reassign the cause of action assigned under this part if the assignor has been or may have been injured by the violation of law for which the cause of action arose and (1) the assignee has not been injured thereby, or (2) the assignee declines to file a court action for the cause of action.

GC-58 Employment Eligibility.

At the request of City, Contractor shall furnish to City copies of Employment Eligibility Verifications (INS Form I-9) or other evidence satisfactory to City showing that any or all persons providing services under this Agreement for on behalf of Contractor are eligible to be employed in the United States. In the event Contractor is unable or unwilling to provide the

employment eligibility verification within ten (10) days after City's request, City may require the immediate removal from the project of such workers as specified by City, and upon any failure by Contractor to do so, City shall be entitled to terminate this Agreement.

**** END OF SECTION ****

SPECIAL CONDITIONS

SC-01. Definitions.

Whenever the following terms, or pronouns used in their stead, occur in these Specifications, the intent and meaning shall be interpreted as follows:

A. Construct: To furnish all labor, tools, equipment and incidentals, and to do Work in accordance with the Contract Documents, complete in place for a fully functional and operating system.

B. Details or Exhibits: That part of the Contract Documents prepared by the Engineer, which schematically shows the scope, extent, and character or the Work to be performed by the Contractor.

C. Specifications: That part of the Contract Documents consisting of written technical descriptions of materials, equipment, systems, standards, including appendices containing various Details and Exhibits, and workmanship as applied to the Work and certain administrative details applicable thereto.

D. State: The State of California.

E. Work: The entire completed construction or the various separately identifiable parts thereof required to be provided under the Contract Documents. Work includes and is the result of performing or providing all labor, services, and documentation necessary to produce such construction, and furnishing, installing, and incorporating all materials and equipment into such construction, all as required by the Contract Documents.

F. Work Area: The area bounded by the rights-of-way immediately adjacent to the project and other delineations as noted in these Specification for which the Contractor shall maintain all work activities. Storage of materials, staging and other miscellaneous work outside of the Work Area is prohibited. If the Work Area is not clearly identified in these Specifications, then the Owner will define said boundaries in the field.

SC-02. Contract Documents.

A. Contract documents consist of the contract (Notice Inviting Bids, Instructions to Bidders, Proposal and Bid Schedule, Project Drawings, Detail Specifications, Bonds and Agreement), together with the Addenda, Change Orders and Notices. The order of precedence of the contract documents shall be:

1. Change Orders, Field Orders, and Work Change Directives
2. Agreement and Bonds
3. Proposal and Bid Schedule
4. Addenda
5. Notice Inviting Bids
6. Instructions to Bidders

7. Notice of Award
8. Notice to Proceed
9. Special Conditions
10. General Conditions
11. Description of Work
12. Project Drawings
13. Standard Plans
14. Detail Specifications
15. Standard Specifications
16. Reference Specifications
17. Notice of Completion
18. Exhibits and Details

B. The Standard Specifications for Public Works Construction (SSPWC), shall supplement, to the extent referenced, the requirements specified herein, and are referenced herein as "Standard Specifications".

C. The Contract Documents may be supplemented by various forms of construction correspondence issued and occurring during the progress of the work. These supplemental Contract Documents are:

1. Request for Interpretation/Clarification

   Requests for Interpretation/Clarification (RFI/RFCs) may be originated by the Owner, the Engineer or the Contractor as necessary during the course of construction. When originated by the Contractor, RFI/RFCs shall be submitted in writing to the Owner's Project Manager, either directly or through the Owner's Inspector. RFI/RFC forms will be provided by the Owner to the Contractor. All RFI/RFCs will be responded to in writing with copies to all parties.

2. Field Orders

   Field orders will be written or verbal instructions confirmed in writing provided by the Owner's Project Manager or Resident Inspector to the Contractor. Field orders will involve minor changes in work, but which do not involve a change in Contract scope, price or time. If the Contractor believes that such an order should require a change in scope, price or time, the Contractor shall file a claim in strict accordance with the Contract Documents.

3. Work Change Directives

   a. Work Change Directives will be issued by the Owner's Project Manager or Resident Inspector in writing. Work Change Directives will involve an addition, deletion or revision to the Contractor's Scope of Work. The directive itself will not change the Contract price or time, but will serve as evidence to all parties that the addition, deletion or revision will be incorporated into a Change Order following negotiation as to its effect.

   b. Work Change Directives issued by the Owner will be incorporated into

a Change Order. The Change Order shall be fully executed by both the Contractor and Owner prior to payment to the Contractor for work performed under the Work Change Directive. All Change Orders to the Contract shall include the following statement:

"The Compensation (time and cost) set forth in the Change Order comprises the total compensation due the contractor, all Subcontractors, and all Suppliers, for the work or change defined in the Change Order, including impact on unchanged work. By signing the Change Order, the Contractor acknowledges and agrees on behalf of himself, all Subcontractors, and all Suppliers, that the stipulated compensation includes payment for all work contained in the Change Order, plus all impact, ripple effect or cumulative impact on all other work under the Contract. The signing of the Change Order indicates that the Change Order constitutes full mutual accord and satisfaction for the change, and that the time and cost under the Change Order constitutes the total equitable adjustment owed the Contractor, all Subcontractors, and all Suppliers as a result of the change. The Contractor on behalf of himself, all Subcontractors, and all Suppliers, agrees to waive all rights, without exception of reservation of any whatsoever, to file any further claim related to the Change Order. No further claim or request for equitable adjustment of any type, for any reasonably foreseeable cause shall rise out of or result of this Change Order or the impact of this Change Order on the remainder of the work under this contract."

SC-03. Contract Plans and Specifications.

A. Plans and Specifications supplied to Contractor: After award of contract, the Owner will furnish to the Contractor, upon request, 5 sets of plans and Specifications. Additional quantities of Specifications may be furnished at reproduction cost.

SC-04. Preconstruction Meeting.

A. Within fifteen (15) calendar days after execution of the contract, the Contractor shall schedule, coordinate and attend a preconstruction meeting with the Owner, Engineer, affected utility companies, and all other interested parties to review the scope of work. The Contractor shall also provide the Owner with at least one local, 24-hour telephone number where the Contractor can be reached day or night, including weekends and holidays.

SC-05. Construction Schedule.

A. General: Within fifteen (15) calendar days after execution of the contract, the Contractor shall prepare and submit to the Owner for review, a progress schedule showing the order in which the Contractor proposes to carry out the Work, the dates on which critical events will occur (including procurement of materials and equipment), and clearly indicate the

estimated start and completion dates for the various tasks. The progress schedule shall show the order in which the Contractor proposes to accomplish the Work activities and shall clearly depict the order, interdependence, duration, and workdays for each activity. The progress schedule shall concur with the interim and final completion requirements of the Contract Documents. The schedule shall show all of the work to be completed for each milestone and interdependence of the various tasks. The schedule breakdown shall be subdivided into areas or facilities in sufficient detail so that the Owner may readily evaluate the Contractor's progress at any given time during the course of the Work and shall be so arranged and itemized as to be of assistance to the Owner in the evaluation of partial estimates and subsequent partial payments.

B. Schedule Format: The schedule shall be presented as a detailed bar chart and shall be shown in sufficient detail so as to identify the beginning and end of each of the various construction activities as described above.

C. Schedule Updates: The Contractor shall maintain an updated schedule at all times. When so requested by the Owner, an updated schedule shall be forwarded to the Owner within 5 calendar days. The Owner's receipt and acceptance of the updated schedule shall be a condition precedent to the issuance of any portion of a progress payment for the preceding month.

D. Schedule Changes Directed by the Owner: In the event that the Owner is of the opinion that any schedule of operation as thus submitted is inadequate to secure the completion of the work in the time agreed upon, or is otherwise not in accordance with the Specifications or if, in the opinion of the Owner, the work is being inadequately or improperly prosecuted in any respect, the Owner may demand that the Contractor submit new schedules and improve or change the prosecution of the work in such manner as to assure proper and timely execution. The Owner's receipt and acceptance of the updated schedule shall be a condition precedent to the issuance of any portion of a progress payment for the preceding month.

SC-06. Emergency Calls.

Arrangements shall be made by the Contractor to insure that a response, in person or by telephone, by a duly authorized and competent representative of the Contractor, will be made within one hour of any emergency calls made by the Owner to the telephone number provided by the Contractor during any hour of the day or night. If the Contractor is unable to respond to an emergency call, the Owner may take any necessary actions to remedy the emergency conditions, at the Contractor's expense, in all cases where the Contractor is obligated or responsible under these conditions.

SC-07. Services During An Emergency.

A. The contractor shall be obligated to assist the Owner in the event of an emergency condition as determined by the Owner in accordance with the requirements of this section.

B. The contractor shall make available to the Owner all mobilized equipment and personnel active on the project and shall provide supervision of such personnel under the direction of the Owner in order to perform required work to respond to an emergency condition.

C. The contractor shall be compensated for such assistance in accordance with Section GC-12, cost plus basis of GC-12d and SC-20, "Accumulation of Costs for Extra Work".

SC-08. Claims. Subparagraph a. of GC-19 is specifically revised herein as follows:

A. The words CHANGE ORDER shall mean a document recommended by ENGINEER, which is signed by CONTRACTOR and OWNER and authorizes an addition, deletion or revision in the work, or an adjustment in the contract price or the contract times, issued on or after the effective date of the agreement.

B. As provided in Article 1.5 of Chapter 1 of Part 3 of Division 2 of the Public Contract Code, claims by the CONTRACTOR shall be in writing and include the documents necessary to substantiate the claim. Claims must be filed with the OWNER promptly, and in no case later than 30 days after the close of the month during which extra cost is claimed to have been incurred. Any claim forwarded to OWNER shall be accompanied by a cover sheet prepared on Contractor's letterhead which includes the following personal certification of the claim:

I,_____, BEING THE _____ (TITLE) OF (GENERAL CONTRACTOR), DECLARE UNDER PENALTY OF PERJURY UNDER THE LAWS OF THE STATE OF CALIFORNIA, AND DO PERSONALLY CERTIFY AND ATTEST THAT: I HAVE THOROUGHLY REVIEWED THE ATTACHED CLAIM FOR ADDITIONAL COMPENSATION AND/OR EXTENSION OF TIME, AND KNOW ITS CONTENTS, AND SAID CLAIM IS MADE IN GOOD FAITH; THE SUPPORTING DATA IS TRUTHFUL AND ACCURATE; THAT THE AMOUNT REQUESTED ACCURATELY REFLECTS THE CONTRACT ADJUSTMENT FOR WHICH THE CONTRACTOR BELIEVES THE OWNER IS LIABLE; AND FURTHER, THAT I AM FAMILIAR WITH CALIFORNIA PENAL CODE SECTION 72 AND CALIFORNIA GOVERNMENT CODE SECTION 12650, ET SEQ, PERTAINING TO FALSE CLAIMS, AND FURTHER KNOW AND UNDERSTAND THAT SUBMISSION OR CERTIFICATION OF A FALSE CLAIM MAY LEAD TO FINES, IMPRISONMENT AND OR OTHER SEVERE LEGAL CONSEQUENCES.

This certification must be signed by an officer of the party of the second part of the agreement. Unless so presented, the claim shall be deemed to have been waived.

SC-09. Bidder's Breakdown Of Lump Sum Bid.

A. In the case of all work for which a lump sum is named in the contract, the Contractor shall submit a detailed schedule of each lump sum item in accordance with Section 9-2 "Lump Sum Work" of the Standard Specifications for Public Works Construction.

SC-10. Working Hours.

A. PERMITS: All work shall be completed during the days and hours permitted in accordance with the permits.

B. HOURS: Work is limited to the hours of 8:00 A.M. to 5:00 P.M., Monday through Friday. Work on Saturdays or Sundays is not permitted. No work of any nature shall commence before 7:00 A.M. including but not limited to: loading, unloading, starting and moving of construction equipment.

C. SATURDAY/SUNDAY WORK: No Saturday or Sunday work will be permitted under this contract except work considered to be an emergency or when the Contractor receives written authorization from the Owner prior to carrying out the subject work.

E. HOLIDAYS: The Owner legal holidays are: New Years Day (January 1), Martin Luther King Day (third Monday in January), President's Day (third Monday in February), Lincoln's Birthday (February 12th), Memorial Day (last Monday in May), Independence Day (July 4th), Labor Day (first Monday in September), Columbus Day (second Monday in October), Veteran's Day (November 11), Thanksgiving Day (as proclaimed by the State of California) and the day after Thanksgiving Day, Christmas Eve (December 24th), Christmas Day (December 25th) and New Years Eve (December 31st).

SC-11. Shop Drawings And Samples.

A. GENERAL

1. The Contractor is required to prepare and submit Shop Drawing submittals to the Engineer for review and approval. Shop Drawings are required for all materials and equipment proposed to be incorporated into the Work. Shop Drawings shall be submitted by the Contractor in accordance with these specifications. Faxed Shop Drawings are not acceptable.
2. The data shown on the Shop Drawings shall be complete with respect to quantities, dimensions, specified performance and design criteria, materials, and similar data to show the materials and equipment the Contractor proposes to provide and to enable the Engineer to review the information for the limited purposes described herein.
3. The Contractor shall also submit material samples to the Engineer for review and approval. Each sample shall be identified clearly as to material, supplier, pertinent data such as catalog number and the use for which intended.
4. As part of each Shop Drawing submittal, the Contractor shall give specific written notice of all deviations that the Shop Drawing or sample submitted may have from the requirements of the Contract Documents. The Contractor shall also provide a notation of each such variation on each Shop Drawing and sample submitted to the Engineer for review and approval.
5. The Engineer will review the Shop Drawings and samples. The

Engineer's review and approval or disapproval will be only to determine if the items covered by the submittals generally comply with the intent of the design. The Engineer's review and approval or disapproval will not extend to means, methods, techniques, sequences, or procedures of construction (except where a particular means, method, technique, sequence, or procedure of construction is specifically and expressly called for by the Contract Documents) or to safety precautions or programs incident thereto. The review and approval of a separate item as such will not indicate approval of the assembly in which the item functions.

6. The Engineer's review and approval of Shop Drawings or samples shall not relieve the Contractor from responsibility for any variation from the requirements of the Contract Documents. No portion of the Work requiring a Shop Drawing submittal shall be started until the submittal has been reviewed by and returned to the Contractor with a notation indicating that resubmittal is not required.
7. Revisions indicated on shop drawings shall be considered as changes necessary to meet the requirements of the Specifications and shall not be taken as the basis of claims for extra work. The Contractor shall have no claim for damages or extension of time due to any delay resulting from making changes to Shop Drawings that have been requested by the Engineer.
8. The Engineer's review is limited to checking for general conformance with the design intent and general compliance with the information included in the Contract Documents. Any comments included on Shop Drawings are subject to all requirements of the Contract Documents, applicable codes and permits, and do no relieve the Contractor of any project responsibilities and requirements thereof. Approval/Acceptability of a specific item does not imply approval of an assembly of which the item is a component.
9. The Engineer will review the initial submittal of Shop Drawings and sample submission and one resubmittal without cost to the Contractor. The cost of the Engineer's review of multiple resubmittals will be billed to the Contractor at the hourly rate of $105 per hour. Multiple resubmittal costs, as provided to the Owner by the Engineer, will be deducted from any monies due or which become due to the Contractor.

B. SHOP DRAWING AND SAMPLE SUBMITTAL PROCEDURES.

1. Before submitting each Shop Drawing or sample, the Contractor shall have done the following:
   a. Verified and determined all field measurements, quantities, dimensions, specified performance criteria, installation requirements, materials, catalog numbers, and similar information.
   b. Verified and determined materials with respect to intended use, fabrication shipping, handling, storage, assembly and installation pertaining to the performance of the Work.
   c. Verified and determined all information relative to the Contractor's means, methods, techniques, sequences and procedures of

construction, and safety precautions and programs.

d. Reviewed and coordinated each Shop Drawing or sample with other Shop Drawings and samples and with the requirements of the Work and the Contract Documents.

2. Each Shop Drawing and sample submission will bear a stamp or specific written indication that the Contractor has reviewed and approved all information in the submittal. The stamp or written indication shall state the following: ***"By this submittal, I hereby represent that I have determined and verified all field measurements, field construction criteria, materials, dimensions, catalog numbers and similar data, and I have checked and coordinated each item with other applicable approved shop drawings and all Contract requirements."***

3. The Contractor shall submit five (5) copies of each Shop Drawing to the Engineer for review and approval at least thirty (30) calendar days before drawings will be required for ordering materials and commencing the work.

4. Every submittal shall be accompanied by a letter of transmittal containing the following:

   a. Contractor's name;

   b. Project title;

   c. Description of the submittal;

   d. Submittals shall be numbered as follows: (spec section no.) – (submittal no. for that spec section) – (letter designation for first or subsequent submittal). Example: 03300-008-B; This example indicates Section 03300 Concrete – eighth submittal for Section 03300 – first resubmittal.

5. Failure of the Contractor to comply with all of the requirements of this section will result in the shop drawings being returned to the Contractor marked "REJECTED".

6. Within 14 calendar days of receipt of properly submitted said Shop Drawings, the Engineer will return 2 copies of each drawing to the Contractor with comments noted thereon. Shop Drawings will be returned to the Contractor with one of the following conditions:

   a. If the drawing is returned to the Contractor marked **"NO EXCEPTIONS TAKEN"** a revision of said drawing will not be required. When the submittal is returned to the Contractor under this condition, the Contractor may release the equipment and/or material for manufacture.

   b. If the drawing is returned to the Contractor marked **"MAKE CORRECTIONS NOTED"** a resubmittal of said drawing will not be required, but the Contractor shall comply with the comments and notations provided by the Engineer. When the submittal is returned to the Contractor under this condition, the Contractor may release the equipment and/or material for manufacture; however, all comments and notations must be incorporated into the final product.

   c. If the drawing is returned to the Contractor marked **"REVISE AND**

RESUBMIT" then the Shop Drawing may partially meet the intent of the Contract Documents; however, significant revision or additional information is required. When the submittal is returned to the Contractor under this condition, the Contractor shall revise said Shop Drawing and resubmit five (5) copies of said revised drawing to the Engineer.

d. If the drawing is returned to the Contractor marked **"REJECTED"** then the submittal was not properly submitted or it does not meet the intent of the Contract Documents and the Contractor shall revise said drawing and shall resubmit five (5) copies of said revised drawing to the Engineer, as in the case of an original submittal.

7. If so indicated, the Contractor shall make corrections requested by the Engineer, and shall resubmit the corrected copies of the Shop Drawings and samples for review and approval. In the case of resubmittals, the Contractor shall direct specific written attention to revisions other than the corrections specifically called for by the Engineer.

SC-12. Maintenance And Guaranty.

A. The Contractor hereby guarantees that the entire work constructed under the Contract shall meet fully all requirements thereof as to quality of workmanship and of materials furnished by the Contractor.

B. The Contractor hereby agrees to make at the Contractor's own expense any repair or replacement made necessary by defects in materials or workmanship supplied by the Contractor that becomes evident within a two-year period after date of final payment, and to restore to full compliance with the requirements of the Contract Documents, including all test requirements, any part of the plant facilities or appurtenant works which, during said two-year period, is found to be deficient with respect to any provision of the Contract Documents.

C. Replacement of backfill, where it has settled below the lines established by the Owner, shall be considered part of such repair work, and any repair of resurfacing constructed by the Contractor that becomes necessary by reason of settlement shall likewise be considered part of such repair work.

D. The Contractor shall make all repairs and replacements promptly upon receipt of written orders for the same from the Owner. If the Contractor fails to make repairs and replacements within 30 calendar days, the Owner may contract with others for performance of the work and the Contractor and the Contractor's surety shall be liable to the Owner for the cost thereof.

SC-13. Permits And Licenses To Be Obtained By The Contractor.

A. All other permits and licenses for construction of the project shall be met solely and fully by the Contractor. The Contractor is also responsible for ensuring that permits obtained by the Owner fulfill all permitting requirements to perform the Work. All costs incurred due to the permit and license requirements shall be included in the various bid items and no additional compensation will be provided by the Owner.

SC-14. Work Area Limits, Site Access, And Material Storage.

A. Work shall be limited to the easements, designated work areas, and public right-of-ways as shown in the Specifications.

SC-15. Temporary Power.

A. The Contractor shall provide, at the Contractor's own expense, all necessary power required for operations under the Contract, and shall provide and maintain all temporary power lines required to perform the work in a safe and satisfactory manner.

B. All temporary connections for electricity shall be subject to the approval of the Owner and the power company representative, and shall be removed in like manner at the Contractor's expense prior to final acceptance of the work.

SC-16. Construction Lighting.

A. All work conducted under conditions of deficient daylight shall be suitably lighted to insure proper work and to afford adequate facilities for inspection and safe working conditions.

SC-17. Dust And Smoke Control.

A. No fuel shall be used nor shall any operation be conducted that will emit into the atmosphere any smoke that is equal to Ringelmann No. 2 or darker.

B. No operation shall be conducted that will emit into the atmosphere any flying dust or dirt that is noticeable or that might constitute a nuisance.

C. Dust control operations shall be performed to prevent construction operations from producing dust in amounts harmful to, or causing a nuisance to, persons living nearby or occupying buildings in the vicinity of the Work.

D. Dry materials and rubbish shall be wet down to prevent blowing dust.

E. Excavated material leaving the site, or material being imported, shall be covered or wet down to prevent excessive dust from being created.

SC-18. Noise Criteria.

A. The Contractor shall abide by the exterior noise criteria allowed by the City of Brisbane and the County of San Mateo during the applicable hours of construction.

SC-19. Sanitation.

A. The Contractor shall furnish and install all necessary field toilets, lavatory fixtures, and daily janitorial services for the duration of the Work. These accommodations shall be maintained in a neat and sanitary condition. The Contractor shall remove said facilities within two (2) days after the execution of the Notice of Completion. All facilities hereunder shall conform to or exceed the applicable requirements of Cal-OSHA and the OSHA standards for construction. The Contractor shall furnish all the facilities and means for the proper sanitation of the Work and shall hold harmless the City, its officers and employees, from any liability resulting from improper or insufficient sanitation measures.

SC-20. Accumulation of Costs for Extra Work.

A. The accumulation of costs for extra work shall be compiled in accordance with Section 9-1.03 of the Standard Specifications for Public Works Construction.

SC-21. Overtime Inspection.

A. Costs for overtime inspections shall include any inspection required in excess of 8 hours per day.

B. All costs of inspection and testing performed by the Owner or its authorized representatives before 7:00 A.M. or after 5:00 P.M. on any normal working day, or all Saturdays, Sundays and Holidays, for work by the Contractor which is allowed solely for the convenience of the Contractor shall be borne by the Contractor at the involved agencies standard overtime rates. Current rates may be obtained from the appropriate agency.

C. See Section SC-10, "Working Hours" for a listing of City legal holidays.

D. Costs of overtime inspection will be deducted from any monies due or which may become due to the Contractor.

SC-22. Lines, Grades, And Measurements.

A. Reference lines and grades for the proposed improvements shall be provided by the Contractor. The Contractor shall preserve all benchmarks, monuments, survey marks, and stakes, and, in case of their removal or destruction by the Contractor or the Contractor's employees, the Contractor shall be liable for the cost of their replacement.

B. The Contractor shall keep the Owner informed, 48 hours in advance, of the times and places at which the Contractor intends to do work, in order that inspection may be made with the minimum of inconvenience to the Owner or delay to the Contractor.

C. Whenever the Owner finds it necessary to carry on operations outside of regular working hours or at other times when the work of the Contractor is not in progress, the Contractor shall furnish all necessary service and assistance. No direct payment shall be made for the cost to the Contractor of any work or delay occasioned by making necessary measurements, or by inspections.

SC-23. Hazardous Materials.

A. In the event the Contractor encounters on the site materials that the Contractor reasonably believes to be asbestos or a hazardous substance, and the asbestos or hazardous substance has not been rendered harmless, the Contractor shall immediately cease work on the area affected and report the condition to the Owner's Representative. The Contractor may continue work in unaffected areas reasonably believed safe.

SC-24. Coordination And Cooperation With Others.

A. During the course of the work to be performed under this Contract, it is possible that other public and private agencies and other contractors will be performing work in the immediate vicinity. The Contractor shall coordinate construction activities with others and notify affected agencies at least five (5) working days prior to beginning work. The Contractor, under this contract shall schedule work and coordinate operations with others so as to minimize conflicts and interference between the Contractor's operations and those of other workers, in strict accordance with Section 7-7 of the Standard Specifications for Public Works Construction. The Contractor shall schedule all work activities to avoid any conflicts with others. No additional compensation will be provided by the Owner for coordination with others.

B. The Contractor expressly waives any and all rights to make claim or be entitled to receive any compensation or damages for failure of the Owner or of a utility company, public agency, or other contractor to have related portions of the project completed in time, creating delays, standby or waiting time for work included in this contract.

C. Note that the main portion of City Hall is open and available to the public Monday, Tuesday and Thursday from 8 AM to 5 PM, Wednesday from 8 AM to 8 PM, and Friday from 8 AM to 1 PM. The Police Department is a

24/7 operation; no access to the work site will be permitted from the Police Department side of the building.

SC-25. Protection And Restoration Of Existing Improvements.

A. The Contractor shall protect in place or remove and replace existing improvements that may be damaged by the Contractor's operations as specified in Section 7-9 of the Standard Specifications for Public Works Construction. Existing improvements may include, but are not limited to: curbs, gutters, sidewalks, fences, trees, road delineators, road striping, existing utilities, irrigation lines, pavement and drainage devices.

B. The Contractor shall protect in place all existing trees not identified for removal. No equipment shall be operated or parked within the drip line of the trees nor shall any material including dirt of any kind be stockpiled in this area without the specific approval of the Owner, unless otherwise shown.

SC-26. Isolation Of Dissimilar Metals.

A. The Contractor shall be responsible for isolating dissimilar metals that have the potential for galvanic corrosion whether or not the isolation system and materials are specifically called out in these specifications.

SC-27. Construction Water

A. The Contractor shall furnish at the Contractor's own expense, an adequate supply of water for the purpose of constructing and testing all of the work described in these specifications and shall make arrangements for developing all water sources and shall supply all labor and equipment to collect, load, transport, and apply water as necessary for compaction of materials, concrete construction operations, testing, dust control, disinfection, and other construction use.

B. All construction water from a City fire hydrant shall be metered. The Contractor may sign up at the City's Public Works Department office for one or more construction meters. After receipt of a deposit of $750 per meter, the City will install the meter at a fire hydrant near the project site. Charges for the construction water are per Section 13.12.020 of the Brisbane Municipal Code. The Contractor shall supply a double check backflow preventer, certified and inspected within the last year and appropriate support approved by the City before the connection to a fire hydrant is allowed.

**** END OF SECTION ****

DIVISION 1 - GENERAL REQUIREMENTS

SECTION 1100 - CONSTRUCTION CONSTRAINTS

I. CONSTRAINTS

All work shall be conducted in a manner that will minimize traffic obstructions caused by the construction.

II. WORKING HOUR

A. All work shall be completed during the days and hours permitted in accordance with the permits.

B. The Contractor shall submit a closure schedule for the Engineer's review and approval prior to any lane closure. Lane closures will be allowed between Monday and Friday from 7 am to 5 pm. No more than one traffic lane shall be closed at any given time.

III. PROJECT COMPLETION

After the effective date of the Notice to Proceed issued by Owner, the Contractor shall diligently prosecute the work to completion within 180 calendar days from the effective date of the Notice to Proceed. If the Contractor fails to complete the work within the time limits set forth herein, or as it may be modified as provided in the Contract Documents, liquidated damages shall be paid to the Owner at the rate of One Thousand Dollars ($1,000.00) per calendar day until the work is completed.

IV. CONSTRUCTION SCHEDULE AND PROGRESS MEETINGS

The Contractor shall schedule continuous weekly progress meetings at the job sites with the City staff and construction manager throughout the project. The Contractor shall submit to the City a weekly construction schedule. It shall show the following two weeks of construction schedule and project status. If the weekly schedule is revised, the Contractor shall request approval of changes from the Engineer at least 24 hours in advance.

**** END OF SECTION ****

SECTION 01312 - PROJECT MEETINGS

I. PRE-CONSTRUCTION MEETING

A. Pre-construction conference will be held at the City of Brisbane Department of Public Works at its office, 50 Park Place, Brisbane, California 94005-1310 at the time and date described in the Special Condition SC-04.

B. Attendance:

1. Owner's representative.
2. Engineer and his or her professional consultants.
3. Contractor's Superintendent.
4. Major Subcontractors.
5. Others as Appropriate.

C. Submit 3 copies of proposed construction schedule at time of meeting.

D. Submit copy of proposed notification letter to residents and merchants at time of meeting.

E. Submit 3 copies of the traffic control & detour plan.

F. Submit products list.

II. PROGRESS MEETINGS

Engineer will schedule regular periodic meetings as required. Contractor shall attend with appropriate staff, subcontractors, or suppliers.

**** END OF SECTION ****

SECTION 01329 - SAFETY AND TRAFFIC CONTROL

I. SAFETY

A. The Contractor's attention is directed to Section 7-1.08 "Public Convenience" and Section 7-1.09 "Public Safety" and Section 12 "Construction Area Traffic Control Devices" of the Standard Specifications.

The provisions in this section will not relieve the Contractor from his or her responsibility to provide such additional devices or take such measures as may be necessary to comply with the provisions in Section 7-1.09, "Public Safety", of the Standard Specifications.

B. Contractor shall at all times during the progress of the work, or temporary suspension of the work, provide, erect and maintain all proper and/or necessary temporary walks, roads, driveways, guards, railings, lights and warning signs; provide a sufficient number of flagmen; and take all necessary precautions at all times for the protection of the work and safety to the public and those engaged in the work. Signs and barricades shall conform to standards approved by the Engineer. All barricades and obstructions shall be illuminated at night with reflector signs and lights, and all lights for this purpose shall be kept burning from sunset to sunrise. If in the opinion of the Engineer, the contractor does not provide sufficient light, barricades, and other safety devices during the course of work, the city may provide them and deduct from the cost due the contractor under this contract. Contractor shall also furnish, install and maintain at his or her own expense such temporary fences, gates and barricades as may be required to protect the work and adequately prevent unauthorized entry into the construction site.

C. Contractor shall post emergency telephone numbers for police, fire, ambulance, and those agencies responsible for maintenance of utilities at the job site.

D. Contractor shall comply with all state, county and city laws and shall comply with ordinances and regulations of the department of industrial relations, OSHA and industrial accident commission relating to safety and character of work, equipment and labor personnel.

E. All trenching operations shall be in accordance with the requirements of title 8 CAL/OSHA.

II. TRAFFIC CONTROL

A. Traffic Control Plan

The Contractor shall prepare and submit at the pre-construction meeting a Traffic Control Plan for the project for the Engineers review and approval before the commencement of any work, including the location and type of advance warning signs and detour routes, as required. The contractor shall submit multiple plans if needed to address different phases or situations in the project.

During the progress of work, when so directed by the Engineer, the Contractor shall submit supplemental traffic control plans. Said supplemental plans shall be approved by the Engineer before the affected item of work is begun. Traffic control plans shall show the placement of all signs, barricades, delineators and other traffic control devices required by the Contractor's operation.

B. Lane Closure

Contractor shall maintain two directional traffic for Valley Drive at all times. .

C. Road Closure

Closing of the road will not be permitted. Two-way traffic shall be maintained at all times.

D. Barricades

Contractor shall be responsible to provide all barricades, cones and traffic control devices and labor. Adequate barricading and signing shall be provided at all times. Sturdy barricades shall be erected at each end of the closed portion and flashers shall be attached thereto. Barricades shall be constructed so as to prevent them from being moved by the general public.

Contractor's attention is directed to Chapter 5 of State Traffic Manual, "Traffic Controls for Highway Construction and Maintenance Operations", for proper placement and usage of traffic controls. Contractor is forewarned that proper traffic control devices and equipment must be provided and that all flagmen must be trained in proper usage of hand signals and equipment.

City reserves the right to require additional barricades and traffic control any time when, in the opinion of the Engineer, Contractor is not adequately providing these items. If Contractor fails to comply immediately with Engineer's request or direction of additional barricades, signing or traffic control, Engineer shall have authority to direct work be stopped until adequate provisions are made and contractor shall have no claim to City for delays or loss of time or material.

E. Signing

Contractor shall provide signs, directional control by flaggers, barricades, flashers, portable delineators, traffic cones and other items required for the safety and convenience of the public. Signs shall be constructed, erected and maintained during the time of contract by the Contractor. The exact location of descriptive project signs and detour signs shall be approved by the Engineer.

Personal vehicles of the Contractor's employees shall not be parked on the traveled way or shoulders.

Whenever vehicles or equipment are parked on the shoulder within 6 feet of traffic lane, the shoulder area shall be closed with fluorescent traffic cones or portable delineators placed on a taper in advance of the parked vehicles or equipment and along the edge of the pavement at 25-foot intervals to a point not less than 25 feet past the last vehicle or piece of equipment. A minimum of 9 cones or portable delineators shall be used for the taper. A C23 (ROAD WORK AHEAD) or C24 (SHOULDER WORK AHEAD) sign shall be mounted on a telescoping flag tree with flags. The flag tree shall be placed where directed by the Engineer.

When traffic cones or delineators are used to delineate a temporary edge of traffic lane, the line of cones or delineators shall be considered to be the edge of traffic lane, however, the Contractor shall not reduce the width of an existing lane to less than 10 feet without written approval from the Engineer.

Contractor shall make provisions for emergency vehicle access during closures. Lane closures will be allowed between Monday and Friday from 7 am to 5 pm. The Contractor

shall maintain one northbound ten-foot traffic lane open at all times.

The Contractor shall submit a construction area traffic control plan for approval by the Engineer before the commencement of any work, including the location and type of advance warning signs and detour routes, as required.

Construction area traffic control devices shall be in accordance with the current Manual of Traffic Controls (Caltrans) and supplemented by the current Work Area Traffic Control Handbook (Building News).

**** END OF SECTION ****

SECTION 01355 - STORM WATER POLLUTION PREVENTION

BEST MANAGEMENT PRACTICES

I. GENERAL

A. WORK INCLUDED

1. Prohibit illicit discharge (non-rainwater) into the storm drain system.
2. Construct any and all necessary systems to eliminate contaminants from entering the storm water system.
3. Clean up and control of work site materials, spoils and debris.
4. Removal of contaminants produced by the project.
5. The work shall include the provision of all labor, materials, equipment and apparatus not specifically mentioned herein or noted on the plans, but which are incidental and necessary to complete the work specified.

B. QUALITY ASSURANCE

1. All work performed under this contract and all contractors and their associates and/or employees are required to comply with all applicable storm water regulations and to implement Best Management Practices (BMP's) at all times.
2. A plan shall be submitted for the proposed control of contaminants entering the storm water system. The plan must be approved by the Engineer prior to the commencement of work.
3. All employees and subcontractors shall be trained on the storm water pollution prevention requirements contained in these specifications.
4. A supply of spill clean-up materials such as rags or absorbents shall be kept readily accessible on-site.

II. EXECUTION

A. RECYCLING

1. At the end of each working day, all scrap, debris and waste material shall be collected and materials disposed of properly.
2. Dry, empty paint cans/buckets, old brushes, rollers, rags and drop cloths shall be disposed of in approved waste collection.
3. Dumpsters shall be inspected for leaks. As leaks are detected, the trash hauling contractor shall be contacted to replace or repair dumpsters that leak.
4. Water from cleaning dumpsters shall not be discharged on-site.
5. Regular waste collection shall be arranged for before dumpsters overflow.

B. HAZARDOUS MATERIAL/WASTE MANAGEMENT/MATERIALS MANAGEMENT

1. Designated areas of the project site shall be proposed by the contractor for approval by the Engineer suitable for material delivery, storage and waste collection as far from catch basins, gutters, drainage courses and creeks as possible.

2. All hazardous materials such as pesticides, paints, thinners, solvents and fuels; and all hazardous wastes such as waste oil and antifreeze shall be labeled and stored in accordance with State and Federal regulations.
3. All hazardous materials and all hazardous wastes shall be stored in accordance with secondary containment regulations, and it is recommended that these materials and wastes be covered as needed, to avoid potential management of collected rainwater as a hazardous waste.
4. The contractor shall dispose of all excess thinners, solvents, chemicals, oil-based and water-based paint as hazardous waste.

   Regular hazardous waste collection shall be arranged for to comply with time limits on the storage of hazardous wastes.
5. Granular materials shall be stored a minimum of ten feet from the closest catch basin and curb return. The contractor shall not allow these granular materials to enter the storm drain or creek.
6. Warning signs shall be posted in areas containing or treated with chemicals.
7. An accurate up-to-date inventory, including Material Safety Data Sheets (MSDS) of hazardous wastes stored on site shall be kept and available to assist emergency response personnel in the event of a hazardous materials incident.
8. Maintenance and fueling of vehicles and equipment shall be performed in a designated, bermed area, or over a drip pan that will not allow run-off of spills. Vehicles and equipment shall be regularly checked and have leaks repaired promptly. Secondary containment shall be used to catch leaks or spills any time that vehicle or equipment fluids are dispensed, changed or poured.

C. CHEMICAL USAGE

1. When rain is forecast within 24 hours, or during wet weather, the Engineer may prevent the contractor from applying chemicals in outside areas.
2. Pesticides or fertilizers shall not be over-applied and material manufacturer's instructions shall be followed regarding uses, protective equipment, ventilation, flammability and mixing of chemicals. Over-application of a pesticide constitutes a "label violation" subject to an enforcement action by the San Mateo County Agriculture Commissioner.

D. DUST CONTROL

1. Contractor control dust on a daily basis as directed by the Engineer.
2. At the end of each working day, or as directed by the engineer, the roadways and on-site paved areas shall be cleaned and swept of all materials attributed to or involved in the work. Streets shall not be washed down into a storm drain or creek in lieu of street sweeping. Water wash may be picked up by a vacuum unit in lieu of sweeping.

E. SAWCUTTING

1. The contractor shall cover or barricade catch basins using control measures such as filter fabric, straw bales, sandbags and fine earthen dams to keep slurry out of the storm drain system. The contractor shall ensure that the entire opening is sealed.
2. Saw cutting debris and spoils be removed by shovel, absorption, vacuum or pick up of waste prior to moving to the next location or at the end of each working day,

whichever is sooner.

3. If slurry enters a catch basin, the slurry shall be removed from the storm drain immediately.

F. DEWATERING OPERATIONS

1. Water shall be routed through a control measure as determined and approved by the Engineer such as a sediment trap, sediment basin or Baker tank to remove settleable solids prior to discharge to the storm drain system. Filtration of the water following the control measure may be required on a case-by-case basis.
2. The filtered water shall be reused for other purposes such as dust control or irrigation to the extent possible.
3. If the project is within an area of known groundwater contamination, the water from dewatering operations shall be tested prior to discharge. If the water meets the Regional Water Quality Control Board standards, it may be discharged into the storm drain. If the water quality meets City of Brisbane municipal code, water may be discharged into the sanitary sewer. Otherwise, the water shall be treated and hauled off-site for proper disposal.

G. CONCRETE GROUT AND MORTAR WASTE MANAGEMENT

1. Concrete, grout and mortar shall be stored away from the drainage areas and ensure that these materials do not enter the storm drain system.
2. Concrete trucks shall not be washed out into streets, gutters, storm drains, drainage channels or creeks.
3. Concrete trucks and equipment shall be washed out off-site or in a designated area on-site where the water will flow onto dirt or into a temporary pit or bermed area. The water shall percolate into the soil and the hardened concrete placed in a waste container for disposal. If a suitable soil or bermed area is not available on-site, the wash water shall be collected and removed off-site and disposed of properly.
4. Water created by the washing of exposed aggregate concrete finish shall be collected in a suitable dirt area or filtered through straw bales or equivalent material before entering the storm drain system. Sweepings from exposed aggregate finish shall be collected and disposed of in a waste container or removed off-site and disposed of properly.

H. PAVING OPERATIONS

1. Catch basins and manholes shall be covered when paving or applying seal coat, tack coat, slurry seal or fog seal.
2. The Engineer may direct the contractor to protect drainage courses by using control measures such as earth dike, straw bale and sand bag to divert run-off or trap filter sediment.
3. Excess sand (placed as part of a sand seal or to absorb excess oil) shall not be swept or washed down into gutters, storm drains or creeks. The sand shall be collected and returned to the stockpile or disposed of in a trash container or hauled to an approved dump site. Water shall not be used to wash down fresh asphalt concrete.

I. PAINTING

1. The cleaning of painting equipment and tools shall be performed in a designated area that will not enter the gutters, storm drains or creeks.

2. Excess paint shall be removed from brushes, rollers and equipment prior to cleanup.
3. Wash water from aqueous cleaning of water-based paint tools and equipment shall be disposed of in a sanitary sewer or onto a designated dirt area.
4. Paint thinners and solvents from oil-based paints shall be filtered and re-used when possible. Waste sludge, thinner and solvent from cleaning tools and equipment shall be disposed of as a hazardous waste.

J. SITE CLEANUP

1. The cleaning of equipment of materials shall not be performed on-site or in the street using soaps, solvents, degreasers, steam cleaning or equivalent methods.
2. All cleanups must be performed in a designated area that will not allow the cleaning rinse to flow off-site or into streets, gutters, storm drains, or creeks.

**** END OF SECTION ****

SECTION 01600 - PRODUCT REQUIREMENTS

I. REQUIREMENTS INCLUDED

A. Material and equipment incorporated into the Work:

1. Conform to applicable specifications and standards.
2. Comply with size, make, type and quality specified, or as specifically approved in writing by Engineer.
3. Manufactured and Fabricated Products:
   a. Design, fabricate and assemble in accordance with the best engineering and shop practices.
   b. Manufacture like parts of duplicate units to standard sizes and gages, to be interchangeable.
   c. Two or more items of the same kind shall be identical, by the same manufacturer.
   d. Products shall be suitable for service conditions.
   e. Equipment capacities, sizes and dimensions shown or specified shall be adhered in writing.
4. Do not use material or equipment for any purpose other than that for which it is designed or is specified.

II. MANUFACTURERS INSTRUCTIONS

A. When Contract Documents require that installation of work shall comply with manufacturer's printed instructions, obtain and distribute copies of such instructions to parties involved in the installation, including two copies to engineer.

Maintain one set of complete instructions and in conformity with installation and until completion.

B. Handle, install, connect, clean, condition and adjust products in strict accord with such instructions and in conformity with specified requirements.

1. Should job conditions or specified requirements conflict with manufacturer's instruction, consult with Engineer for further instruction.
2. Do not proceed with work without clear instructions.

C. Perform work in accord with manufacturer's instructions. Do not omit any preparatory step of installation procedure unless specifically modified or exempted by Contract Documents.

III. TRANSPORTATION AND HANDLING

A. Arrange deliveries of products in accordance with construction schedules, coordinate to avoid conflict with work and conditions at the site.

1. Deliver Products in undamaged condition, in manufacturer's original containers or packaging, with identifying labels intact and legible.
2. Immediately on delivery, inspect shipments to assure compliance with requirements

of Contract Documents and approved submittal, and that Products are properly protected and undamaged.

B. Provide equipment and personnel to handle Products by methods to prevent soiling and damage to Products or packaging.

IV. STORAGE AND PROTECTION

A. Store Products in accordance with manufacturer's instruction, with seals and labels intact and legible.

1. Store products subject to damage by the elements in weather-tight enclosures.
2. Store loose granular materials in a well-drained area on soil surfaces to prevent mixing with foreign matter.

B. Arrange storage in manner to provide easy access for inspection. Make periodic inspections of stored Products to assure that Products are maintained under specified conditions, free from damage or deterioration.

C. Protection After Installation:

Provide substantial coverings as necessary to protect installed Products from damage from traffic and subsequent construction operations. Remove when no longer needed.

V. SUBSTITUTIONS AND PRODUCT OPTIONS

A. Products List

Within 15 days after Contract Date, submit to Engineer a complete list of major products proposed to be used, with the name of the manufacturer and the installing subcontractor.

B. Contractor's Option

1. For products specified only by reference standard, select any product meeting the standards.
2. For products specified by naming several products or manufacturers named, select any product specified which complies with the specifications.
3. For Products specified by naming one or more Products or manufacturers and "or equal", contractor must submit a request as for substitutions for any Product or manufacturer not specifically named.
4. For Products specified by naming only for Product and manufacturer, there is no option.

C. Substitution

1. For a period of 15 days after Contract Date, Engineer will consider written requests from Contractor for substitution of Products.
2. Submit a separate request for each Product, supported with complete data, with drawing and samples as appropriate, including:
   a. Comparison of the qualities of the proposed substitution with that specified.
   b. Changes required in other elements of the work because of the substitution.
   c. Effect on the construction schedule.
   d. Cost data comparing the proposed substitution with the Product specified.

e. Any required license fees or royalties.

f. Availability of maintenance service, and source of replacement materials.

g. Engineer shall be the judge of the acceptability of the proposed substitution.

D. Contractor's Representation:

1. A request for a substitution constitutes a representation that Contractor:

a. Has investigated the proposed Product and determined that it is equal to or superior in all respects to that specified.

b. Will provide the same warranties or bonds for the substitution as for the substitution as for the Product specified.

c. Will coordinate the installation of an accepted substitution into the Work, and make such other changes as may be required to make the Work complete in all respects.

d. Waives all claims for additional costs, under his or her responsibility, which may subsequently become apparent.

E. Engineer will review requests for substitutions with reasonable promptness, and notify Contractor, in writing, of the decision to accept or reject the requested substitution.

**** END OF SECTION ****

SECTION 01770 - PROJECT CLOSEOUT

I. CLEANUP

Upon completion of the work under this Contract, the Contractor shall remove all surplus construction materials, earth and debris resulting from his or her work so that the entire job site and all areas occupied by him or her are left in a neat and orderly condition, as directed by the Engineer. Clean-up operations must be complete prior to final acceptance of work.

II. GUARANTEE

A. In addition to any specific guarantee mentioned in these specifications, the Contractor shall guarantee all material, apparatus, equipment and workmanship furnished to be free from all defects, and agrees to replace, at no expense to the Owner, any and all defective parts or labor that may be found at any time within two (2) years from date of acceptance by the Owner. The Contractor also guarantees to repair or replace with like materials, any existing work in or around the job site that may be damaged during the repair of any other defective work.

B. Signing the Contract for the work covered by these specifications, of which it shall become a part, shall be considered as a written guarantee to carry out the provisions of this section of the specifications.

III. PROJECT RECORD DRAWINGS

A. Prior to final acceptance of the project, complete "as built" record drawings shall be supplied to the Engineer for incorporation on the original tracings. All reference dimensions, corrections to existing data shown on the plans and revisions to the constructed improvements, shall be shown on one set of record prints.

B. The Contractor is responsible for maintaining an accurate set of "as built" drawings during the course of construction.

IV. FINAL INSPECTION

Before filing the Notice of Completion, a final inspection will be held with the Contractor, Engineer, and Owner's representatives to review and evaluate compliance with the Contract Documents. If the work is determined to be substantially complete by the Engineer and Owner's representatives, then the Engineer will issue a punch list of items that remain to be accomplished. All "punch list" items must be completed prior to final acceptance.

V. INSPECTION FOR FINAL ACCEPTANCE

An inspection for final acceptance will be scheduled when all "punch list" items have been completed, and all deficiencies have been corrected. The project must be completed and functional before this final acceptance is performed.

**** END OF SECTION ****

DIVISION 26 0000 – GENERAL ELECTRICAL CRITERIA

PART 1 - GENERAL

1.01 DESCRIPTION

A. This is a design/build project, to include the design and construction of a complete roof mounted photovoltaic system, including all AC and DC portions of the system and the utility tie-in.

B. The preliminary design criteria drawings and these specifications shall be used as the performance criteria for the design, engineering, and installation of the complete and fully operational PV system at the City Hall building.

C. The proposer shall include in their proposal all design and engineering costs associated with the PV system design, including all materials, installation, testing, utility company coordination, and system training.

D. The proposal shall include all required structural engineering support to verify and calculate proper roof structure capacity and system loading. The proposer will be provided with the available structural calculations and roofing plans for the building, and shall provide all required PV system related structural calculations as part of this project.

E. Each proposal shall include an expected yearly system production value in kWH, with associated yearly degradation, for a 20 year period.

1.02 RELATED DOCUMENTS

A. The preliminary design criteria drawings general provisions of the Contract, including General and Supplementary Conditions and Division 1 Specification Sections apply to the Work of this Section.

B. Refer to Section 26 3100 for detailed photovoltaic system electrical parameters and requirements.

1.03 REQUIREMENTS

A. The intent of these specifications and supplemental drawings is to define the electrical scope of work for a complete and fully functioning photovoltaic systems at the City Hall and to enable the proposer to prepare a proposal price. The design and installation shall conform to all requirements as defined by the applicable codes, laws, rules, regulations and standards of applicable code enforcing authorities.

B. The proposer shall include in the price, all items and all work reasonably inferred by these specifications and drawings and for compliance with applicable codes, and to

provide a complete interconnected and operating system at the site.

C. If the proposer is in doubt as to the intent of any portion of these specifications and drawings, or necessary information is omitted, then the proposer shall notify the City in writing in sufficient time for the City's clarifications or corrections by addendum.

D. Drawings and proposed array location and equipment locations are only provided as a general preliminary design guide and the successful contractor shall provide all design, engineering, and required planning for a complete system.

E. The successful contractor shall coordinate with the utility company for the installation and interconnection of the PV system and shall provide for, and comply with, all utility company requirements.

1.04 GENERAL

A. All proposals shall conform to all requirements set forth in the Invitation for Proposal Documents.

B. All proposals shall include professional design fees, all applicable taxes, permits, inspection fees and all other costs that are normally associated with the work.

C. The successful proposer shall include, as part of their requirements, the preparation of complete working drawings and specifications, and all final approvals, necessary to commence and complete the required work.

D. Provide all engineering design services and complete coordination with other disciplines, trades, utility company, labor, materials, apparatus, tools, equipment, transportation, temporary construction and power and special or occasional services as required to make a complete and working PV system at the City Hall.

E. Comply with applicable requirements of the utility company standards and specifications.

F. The electrical design shall be fully developed, including descriptions and updated supportive calculations for all power and grounding systems (AC and DC). Locate and layout all equipment. The site plan, elevations, schedules and detail drawings must be sufficiently developed to reflect the overall system design. The final version of the single line diagram of the electrical system shall show tie-in with the local utility system, including utility approved PV disconnect switch, to be installed to meet all utility company requirements. Provide elevation of the switchboard, etc. showing arrangement of equipment, as required, including addition of utility company barrier between the meter compartment and main breaker, if required, to meet utility company requirements.

G. Proposer Exclusions and Substitutions:

1. It is intended that the proposer be allowed freedom to pursue an approved design

toward the City's benefit with respect to cost and performance.

2. The base proposal shall be based on the general systems described herein. The proposer may offer alternatives, substitutions, or exclusions in any area of the work, provided that each case is clearly described with the benefits noted. This applies to systems, methods, equipment and material for which such alternatives or substitutions would, in the proposer's opinion, be beneficial to the project and the City, so far as safety, health, and comfort of occupants are satisfied and the requirements of Codes are met. The proposer is expected to provide the maximum benefits of their purchasing power in the market.

3. Burden of proof of equality of any substitution for a specified product is the responsibility of this proposer.

1.05 WORK INCLUDED

A. The scope of work shall include the design of the electrical work, materials, equipment, fabrication, installation and tests in conformity with applicable codes, professionally recognized standards, and authorities having jurisdiction.

B. The electrical design shall be fully developed, including but not limited to the following:

1. Description and supportive calculations for all power and grounding systems.

2. Location and layout of all system equipment and raceways / boxes.

3. Site plan, elevations, schedules, equipment arrangement and detailed drawings.

4. Metering & Monitoring systems, to include PV production and building total consumption metering, as well as PV system monitoring.

5. Single line diagram including local utility system tie-in.

6. Evaluation of existing switchgear and Utility transformer for interconnection compatibility.

7. All other drawings, calculations, details, and schedules required for the system design.

C. Provide all required construction documents and compliance documentation.

D. Provide temporary power and lighting as required for construction.

E. Provide all materials, labor, equipment, services, and incidentals necessary to install the PV system as shown on the drawings and as specified hereinafter.

F. Include all required incidental work, such as underground surveying, excavating, backfilling, roof flashing, firestopping, and testing.

G. Include any other electrical work as might reasonably be implied as required, even though not specifically mentioned herein or shown on the drawings, if required for a complete and operational system.

H. Design and construction coordination with all other disciplines and trades.

I. All other utilities, labor, materials, apparatus, tools, equipment, transportation, and special or occasional services as required.

1.06 INCORPORATED DOCUMENTS AND STANDARDS

A. Comply with all applicable codes, laws, rules, regulations, and standards of applicable code enforcing authorities, including but not limited to:

1. Office of the State Fire Marshal - Solar Photovoltaic Installation Guidelines.
2. California Electrical Code, latest edition (NEC).
3. Local and State Fire Code.
4. Uniform Building Code (UBC).
5. California Title 20 and 24
6. Occupational Safety and Health Administration (CAL-OSHA).
7. All applicable State and Local Codes and Ordinances.
8. Utility Company interconnection requirements.
9. All other Utility Company requirements.
10. American National Standards Institute (ANSI).
11. American Society for Testing and Materials (ASTM).
12. Factory Mutual (FM)
13. Federal Communications Commission (FCC).
14. Institute of Electrical and Electronics Engineers (IEEE).
15. National Electrical Manufacturers Association (NEMA).
16. National Fire Protection Association (NFPA).
17. Underwriter's Laboratories (UL).

1.07 DESIGN PROCEDURE

A. Design Electrical Engineer: Engineering calculations, drawings and specifications shall

be prepared and signed by an Electrical Engineer, registered in the State of California and regularly employed in the design of photovoltaic electrical systems. The Electrical Engineer shall be retained by the proposer.

B. Engineer of Record: Design Electrical Engineer shall be the Engineer of Record as required by code enforcing authorities. The Engineer of Record shall provide required statements and certifications.

C. Electrical design shall be complete and comply with all requirements specified, including materials, workmanship and performance.

D. Coordinate design with available Architectural Drawings and site conditions, to ensure completely coordinated construction documents.

1. Lay out equipment in a manner to provide proper access for servicing, maintenance, inspection, and testing.

2. See Electrical Criteria Drawings for equipment locations.

3. Coordinate space requirements with the City.

a. Design Requirements:

1) General: Prepare required calculations, drawings and specifications for design of a complete PV system at the City Hall.

2) Drawings: Prepare working drawings, complete for systems to be provided that shall include but not be limited to the following:

(a) PV System Electrical:

(1) Utility interconnection, with approved AC PV Utility Disconnect Switch.

(2) Raceways.

(3) Combiner boxes / panels (if required).

(4) Feeder and branch circuit wiring (AC and DC).

(5) Inverter equipment, including transformers (if required).

(6) PV Modules.

(7) Data Aquisition / Monitoring System.

(8) Inserts and supports.

(9) Cutting and patching.

(10) Excavation and backfill.

(11) Grounding systems.

(12) Equipment mounting details.

(13) Equipment space layouts and clearances.

(14) Single line diagram.

3) All dimensions, together with locations of roofs, partitions, etc. are to be taken from actual site conditions (to be field verified by the proposer).

b. Measurements: Before ordering any material or closing in any work, verify all measurements at the project site. Any differences found between dimensions on the drawings and actual measurements shall be brought to the City's attention for consideration before proceeding.

1.08 DESIGN DOCUMENTATION

A. Submit each item in this Article according to the Conditions of the Contract and Division 1 Specification Sections.

1.09 ADDITIONAL DESIGN CRITERIA

A. Grounding Systems:

1. System and equipment grounding shall be provided as required by code. All inverters, switchboards, distribution panelboards, panelboards, transformers, wiring systems, steel structures, etc. shall be effectively grounded to the equipment grounding and grounding electrode system, per NEC 250 and 690.

2. All grounding electrode system connections, including ground rods, shall be installed concealed, but visible and accessible (i.e. ground rods and connections to be in flush in-ground boxes with "grounding" label). Grounding electrodes may be installed concealed in concrete when connections are made with exothermic welds, cast into the concrete pour. All connections to be inspected prior to pour. No exposed ground rods (above grade) or exposed unprotected grounding connections shall be allowed.

1.10 CONDITIONS AT SITE:

A. A visit to the site is required of all proposers prior to submission of proposals. All will be held to have familiarized themselves with all discernible site conditions and no extra payment will be allowed for work required because of these conditions, whether specifically mentioned or not.

B. Contractor shall provide all required underground locating (surveying) services prior to digging in any area.

C. Lines of other services that are damaged as a result of this work shall promptly be repaired at no expense, and to the complete satisfaction, of the City.

1.11 ELECTRICAL CONDITIONS AND SYSTEM REQUIREMENTS:

A. The following information is provided as a guide to help the Proposer prepare a bid and system design for the work required at the City Hall. The information has been gathered to establish minimum system design requirements and to provide preliminary system conditions. Final system design responsibility and complete site review and analysis is the responsibility of the Proposer.

1. The existing City Hall PG&E service rated at 1600A, 120/208V, 3-Phase, 4-Wire, and is fed underground from a pad-mounted utility transformer.
2. Both the switchboard and the pad-mounted utility transformer (and an emergency generator) are located at the exterior South side of the building, in a fenced enclosure. All existing equipment in this area is existing to remain, and shall be protected in place.
3. The switchboard as manufactured by Square D.
4. The PG&E meter number is #1009503687 (Smart Meter).
5. The PG&E transformer number is T#6385.
6. The PV system interconnection shall properly accommodate the existing emergency power generator so that the generator and PV system cannot be interconnected together at the same time.
7. Access for a supply side connection per NEC 705.12(A) may be available above the main breaker, and to the right of the meter and CT section. Actual conditions will need to be confirmed and coordinated by the proposer.
8. Any proposed load side connection per NEC 705.12(D) shall meet all applicable requirements, based on the existing 1600A bussing size and the proposed PV system maximum inverter output circuit capability.
9. Any supply side interconnection will be required to occur outside of the utility CT section and the related PV conductors for the system shall remain clear of the utility sections.
10. Locate a utility required AC disconnect in a location approved by PG&E and to meet all required code clearances.
11. Properly placard the final interconnection, per NEC and utility company requirements.
12. Route feeder from switchboard to roof arrays, up the South side of the building, painted to match the building surface.
13. Coordinate for proper space, size, clearances, and protection of all required equipment at ground level and roof (i.e. inverters, AC combiner panels, etc.).

1.12 QUALITY ASSURANCE

A. General:

1. Construction Documents shall be designed and signed by a validated, registered

professional engineer in the State of California.

B. Conformance:

1. All equipment and accessories to be the product of a manufacturer regularly engaged in its manufacture.

2. Supply all new equipment and accessories free from defects and listed by Underwriter's Laboratories, Inc., or bearing its label.

3. All items of a given type shall be the products of the same manufacturer.

C. Coordination:

1. The proposer shall become familiar with the conditions at the job site and plan the installation of the electrical work to conform with the existing conditions so as to provide the best possible assembly of the combined work of all trades.

D. Coordination Drawings for electrical installation:

1. Prepare Coordination Drawings, to scale. Detail major elements, components and systems of electrical equipment and materials in relation to each other and to other systems, installations, and building components. Indicate locations and space requirements for installation, access and working clearances. Show where sequence and coordination of installations are important to the efficient flow of the Work. Indicate the following:

a. Provisions for scheduling, sequencing, moving and positioning large equipment in or on the site or buildings during construction.

b. Floor plans, elevations and details including the following:

1) Clearances to meet safety requirements and for servicing and maintaining equipment, including space for equipment disassembly required for periodic maintenance.

2) Equipment support details.

3) Exterior wall, roof and foundation penetrations of cable and raceway; and their relation to other penetrations and installations.

4) Fire-rated wall and roof penetrations by electrical installations.

5) Sizes and locations of any required concrete work.

6) Grounding system details.

1.13 CONSTRUCTION PHASE SUBMITTALS AND MANUALS

A. Comply with the provisions of Division 1 - Submittals.

B. Submit the following:

1. Complete material list of all items proposed to be furnished and installed under this Section, including but not limited to the following items: PV Modules, wiring, combiner boxes, panelboards, splices, inverters, transformers, disconnects, boxes, etc. All items of a given type shall be the products of the same manufacturer.

2. Manufacturers' specifications and other data required to demonstrate compliance with the specified requirements.

3. Manufacturers' recommended installation procedures which, when approved by the City, shall become the basis for inspecting and accepting or rejecting actual installation procedures used on the work.

C. Shop Drawings: Furnish shop drawings and/or equipment cuts for the following:

1. PV Module layouts

2. Inverter / Equipment layouts

3. Raceway routing, penetration details, attachment details.

D. Test Reports:

1. Factory Tests: As specified for specific equipment in Part 3.

2. Field Tests: Performance tests as specified for specific equipment in Part 3.

E. Maintenance and Operating Manuals:

1. Systems Description: Description of operating procedures.

2. Controls: Diagrams and description of operation of each system.

3. Equipment: Manufacturer's brochures, ratings, certified shop drawings, maintenance data, and parts lists with part numbers. Mark each sheet with equipment identification number and actual installed condition.

4. Materials and Accessories: Manufacturer's brochures, parts list with part numbers, and maintenance data where applicable. Mark each sheet with identification number of system and location of installation.

F. Record Documents:

1. Maintain "as-built" records at all times, showing the exact location of concealed conduits and feeders installed under this contract, and actual numbering of each circuit. Upon completion of work and before acceptance can be considered, this proposer must forward to City, a corrected set of plans to show the electrical work as installed.

2. Also provide CAD (electronic format) "as-built" files of all drawings to the City upon completion.

3. Comply with additional "As-built" requirements in other sections of the Specifications.

1.14 DELIVERY, STORAGE AND HANDLING

A. Protection: Use all means necessary to protect the materials of this Section before, during, and after installation and to protect the work and materials of all trades.

B. Delivery and Storage: Deliver all materials to the job site in their original containers with all labels intact and legible at time of use. Store in strict accordance with approved manufacturers' recommendations.

C. Replacements: In the event of damage, immediately make all repairs and replacements necessary to the approval, and at no additional cost to, the City.

D. This proposer shall personally, or through an authorized representative, check all materials upon receipt at jobsite for conformance with approved shop drawings and/or plans and specifications.

1.15 SCHEDULING/SEQUENCING

A. Place orders for all equipment in time to prevent any delay in construction schedule or completion of project. If any materials or equipment are not ordered in time, additional charges made by equipment manufacturers to complete their equipment in time to meet the construction schedule, together with any special handling charges, shall be borne by this proposer.

1. The proposer shall coordinate production and delivery schedule for all City-supplied equipment with the equipment suppliers to ensure that all City-supplied equipment is delivered to site in coordination with the construction schedule and in such a manner as to cause no delays in completion of the Contract as scheduled.

1.16 WIND AND SEISMIC DESIGN

A. Comply with all applicable codes and standards and provide wind load restraints for all equipment installed under this contract that requires restraint. The photovoltaic array wind loading restraint shall be designed as required by wind tunnel data. The photovoltaic array shall be designed to accommodate lateral displacement in the event of an earthquake based on a nonlinear response-history seismic analysis for the appropriate seismic zone.

1.17 PERMITS AND INSPECTIONS

A. This proposer shall obtain a City Building Permit and Solar Electric Permit and arrange for all required inspections, including utility company requirements, inspections, and

sign-offs.

B. This proposer shall obtain local Fire Marshal approval and comply with all Fire Marshal requirements.

C. Do not allow or cause any of the work to be covered or enclosed until it has been tested and/or inspected.

PART 2 - PRODUCTS

2.01 MATERIALS

A. Materials of the same type or classification, used for the same purpose, shall be the product of the same manufacturer.

2.02 POSTED OPERATING INSTRUCTIONS

A. Furnish approved operating instructions for systems and equipment where indicated in the technical sections for use by operation and maintenance personnel. The operating instructions shall include wiring diagrams, control diagrams, and control sequence for each principal system and equipment. Print or engrave operating instructions and frame under glass or in approved laminated plastic. Post instructions as directed. Attach or post operating instructions adjacent to each principal system and equipment including startup, proper adjustment, operating, shutdown, safety precautions, procedure in the event of equipment failure, and other items of instruction as recommended by the manufacturer of each system or equipment. Provide weather-resistant materials or weatherproof enclosures for operating instruction exposed to the weather. Operating instruction shall not fade when exposed to sunlight and shall be secured to prevent easy removal or peeling.

2.03 CATALOGED PRODUCTS / SERVICE AVAILABILITY

A. Materials and equipment shall be current products by manufacturers regularly engaged in the production of such products. Products shall have been in satisfactory commercial or industrial use for 2 years before proposal. The 2-year period shall include applications of equipment and materials under similar circumstances and of similar size. The 2-year period shall be satisfactorily completed by a product for sale on the commercial market through advertisements, manufacturers' catalogs, or brochures. Products having less than a 2-year field service record will be acceptable if a certified record of satisfactory field operation for not less than 6,000 hours, exclusive of the manufacturers' factory or laboratory tests, is furnished. The equipment items shall be supported by service organizations which are reasonable convenient to the equipment installation in order to render satisfactory service to the equipment on a regular and emergency basis during the warranty period of the contract.

2.04 ACCEPTABLE MANUFACTURERS

A. Materials shall be of make mentioned elsewhere in this specification. All materials

shall be the best of their several kinds, perfectly new and approved by the Underwriters' Laboratories.

2.05 BASIC ELECTRICAL MATERIALS

A. Inverters and PV Modules - as determined by the proposer, to meet the project requirements and in compliance with other parameters as listed in Section 26 3100.

B. AC Panelboards:

1. As manufactured by Square D to match the existing equipment at the City Hall. Equipment shall be Nema 3R outdoors, Nema 1 surface mounted in unfinished interior locations, and flush mounted in finished and occupied spaces. Provide housekeeping pads for all floor or ground mounted equipment.

2. Enclosures: code gauge galvanized sheet steel with welded full flange end pieces, stretcher- leveled steel trim, back pan and door. All surface mounted panels to have enclosures painted in gray enamel. All flush mounted panels to have cover painted to match adjacent surface.

3. Phase and ground bussing of copper with silver-plated contact surfaces.

4. Trims on surface-mounted cabinets secured with nickel-plated screws with cup washers, bottom of all trims to have lugs for resting on cabinet flange.

5. Panels shall be 20 inches minimum in width, provided with approved gutter space, barriers and adjustable supports. Doors mounted with concealed hinges provided with combination spring latch and lock. Doors and trims and surface mounted cabinets primed and finished with one coat baked on gray enamel.

6. Breakers on same phase to be aligned horizontally.

7. Each panel shall be equipped with a copper ground bus.

8. All panels shall be fully bussed to accept future circuit breakers.

C. Distribution Low Voltage Dry-Type Transformers, if required (120/208V and 277/480V):

1. Ventilated type, Nema 3R where used outdoors.

2. Transformer shall be 3 phase, 60 Hertz. Primary winding and secondary winding shall be Wye or Delta connected as required to properly serve the system equipment. The temperature rise at rated voltage and full load shall not exceed 150 degrees C with a 220 degrees C U.L. Component Recognized Insulation System. The windings shall be Aluminum or Copper.

3. The higher voltage winding shall have quantity (6) 2.5% taps - (2) FCAN and (4) FCBN.

4. Transformer terminals shall be front connected for ease of installation and maintenance.

5. Where the transformers are installed outdoors, provide weatherproof drip cover, rodent screen and a NEMA 3R rating of the enclosure.

6. Transformers shall be suitable to carry the PV load characteristics and in the direction of power flow required for the PV system power production.

D. Circuit Breakers:

1. Circuit breakers shall be molded case rated 240 or 480 volt, multiple or single pole with amperage ratings as required for each circuit. All breakers to be bolt on, manually operated with "de-ion" arc chutes. Plug-in breakers are not acceptable.

2. Circuit breakers shall be rated to interrupt the available short circuit current at the point of application.

E. Raceways: Only the raceways specified below shall be utilized on these projects. Substitutions shall be pre-approved in writing:

1. Rigid Type - hot dip galvanized or sherardized steel, to be used at all exterior locations, below grade, or in concrete slab, and to 18" on either side of structural expansion joints in floor slabs, with completely watertight, threaded fittings throughout.

   a. All rigid steel conduit couplings and elbows in soil or concrete or under membrane to be ½ lap wrapped with Scotch #50 tape and threaded ends coated with T&B #S.C.40 rust inhibitor prior to installation of couplings.

   b. ½ lap wrap all rigid steel conduit stub-ups from slab or grade to 6" above finished grade level with Scotch #50 tape.

   c. In lieu of rigid steel conduit for power and control raceways and branch circuit conduits in soil or concrete slabs, "Schedule 40" PVC with Schedule 80 PVC conduit elbows and stub-ups may be used with code size (minimum No. 12) ground wire. A “stub-up” is considered to terminate 6" above the finished surface.

      1) Schedule 80 PVC conduit shall be used in all concrete footings or foundations and to 18" of either side of footings or foundation walls.

2. Electrical metallic tubing shall be used exposed in electrical and mechanical rooms and in unfinished spaces and in concealed and furred spaces, made up with steel watertight or steel set screw type fittings and couplings. Set screws shall have hardened points. Cast fittings are unacceptable.

3. Conceal all interior conduit in ceiling or walls of all areas where possible.

4. All exposed or roof mounted conduits to be installed parallel to building members.

5. All exposed conduits on sides of buildings, or in other visible areas, shall be painted to match adjacent finishes, after complete installation.

6. Fasten conduits securely to boxes with locknuts and bushings to provide good electrical continuity.

7. To facilitate pulling of conductors, install junction boxes as required.

8. If any empty conduits are provided as part of the projects, they shall be provided with a pullwire.

9. If conduits are to pass through structural expansion joints in floor slab, rigid galvanized conduit shall be used 18" on either side of joint, complete with Appleton expansion couplings and bonding jumpers, or equal. All above grade expansion joint crossings shall also utilize expansion joint couplings or flex conduit transitions as required for each particular installation. No solid conduits shall be allowed to cross expansion joints without proper provisions for building and seismic movement.

10. Minimum cover of conduits in ground outside of building - 24 inches, unless otherwise noted.

F. Junction Boxes / Pullboxes:

1. One piece steel knockout type drawn j-boxes, unless otherwise noted, sized as required for conditions at each location.

2. J-boxes for wet locations, cast aluminum FS or FD type with cast aluminum gasketed spring lid cover. Weatherproof "Bell" type boxes are not acceptable.

3. Pull boxes to be Nema 1 (indoor) or Nema 3R (outdoor), sized per code, with grey enamel finish, steel construction, and screw-on covers.

4. All connectors from conduit to junction or outlet boxes shall have insulated throats. Connectors shall be manufactured with insulated throats as integral part. Insertable insulated throats are unacceptable.

5. Conduit Bodies: Malleable iron type, with lubricated spring steel clips over edge of conduit body, O-Z/Gedney type EW, or equal.

6. All exposed boxes (and conduits) on sides of buildings, or in other visible areas, shall be painted to match adjacent finishes, after complete installation, including special banding to match building colors.

G. Site Pull boxes (600 volts and less): All site pull boxes shall be flush in-ground concrete, with engraved covers identifying service use (i.e. photovoltaic). Boxes shall be Nema 250, Type 6, outside flanged, with recessed cover for flush mounting, by

Christy or equal, with required depth to provide box and conduit depths shown or required.

a. Provide concrete covers for all boxes in planted or paved areas (up to available concrete cover size).
b. Provide galvanized steel covers for all larger boxes (when concrete is not available), or in traffic areas. No cast iron covers.
c. Provide bolted covers and slab bottoms (with grouted perimeter) or vault type boxes for all electrical pull boxes used for site distribution, to prevent rodent entry. No collar type boxes with dirt or gravel bottoms.
d. Provide drain hole at bottom of all vault type boxes, with loose aggregate base below, for proper drainage.
e. All covers to be completely flush with finished adjacent surfaces.
f. Provide galvanized steel H20 rated covers and installation of box rated for H20 in all traffic areas.
g. Provide pullboxes per utility company specifications for all electrical primary and secondary services, if required due to system design. Verify exact size and type prior to order with utility company.

H. Wire and Cable:

1. 600-volt class, insulation color coded, minimum No. 12 AWG for string circuits.

2. Refer to Section 26 3100 for additional wire specifications to be used for this PV project.

3. All conductors shall be copper.

4. Insulation type:

   a. Standard locations: #12 to #1 AWG: THWN for wet and dry locations. #1/0 through #4/0 AWG: XHHW (55 Mils). 250MCM and larger: XHHW (65 Mils). All AC wire sizes used shall be based on a 75 degree insulation rating, unless specifically used with 90 degree rated devices. All DC wire sizes shall be based on 90 degree insulation rating, when used with 90 degree rated PV equipment and components.

   b. Conductors No. 10 and larger shall be stranded. Conductors No. 12 and smaller shall be solid.

   c. Install all wiring (low voltage and line voltage) in conduit, except PV string wiring at modules, which may be run outside of raceway per section 26 3100.

   d. Do not pull conductors into conduit until raceways and boxes have been thoroughly cleaned and swabbed as necessary to remove water and debris.

   e. Approximately balance all AC circuits about the neutral conductors in AC collector panels.

   f. All wire and cable shall bear the Underwriters' Label, brought to the job in

unbroken packages.

g. The equipment grounding conductor shall be insulated copper; where it is insulated, the insulation shall be colored green.

h. Install all circuits in one continuous section unless splices are approved by City. Exercise care in pulling to avoid damage or disarrangement of conductors, using approved grips. No cable shall be bent to smaller radius than the spool on which it was delivered from the manufacturer. Color code feeder cables at terminals. Provide identifying linen tags in each pullbox

I. Firestopping: as manufactured by 3M Fire Protection Products or equal.

1. Fire-rated and smoke barrier construction: Maintain barrier and structural ceiling fire and smoke resistance ratings including resistance to cold smoke at all penetrations, connections with other surfaces or types of construction, at separations required to permit building movement and sound vibration absorption, an at other construction gaps.

2. Systems or devices listed in the UL Fire Resistance Directory under categories XHCR and XHEZ may be used, providing that it conforms to the construction type, penetration type, annular space requirements and fire rating involved in each separate instance, and that the system be symmetrical for wall penetrations. Systems or devices must be asbestos free.

PART 3 - EXECUTION

3.01 INSPECTION

A. Examine the areas and conditions under which the work of this Section will be installed. Correct conditions detrimental to the proper and timely completion of the Work. Do not proceed until unsatisfactory conditions have been corrected.

3.02 FIELD QUALITY CONTROL

A. All workmanship shall be first class and carried out in a manner satisfactory to and approved by the City.

B. This proposer shall personally, or through an authorized and competent representative, constantly supervise the work, and so far as possible, keep the same foreman and workmen on the job throughout.

3.03 INSTALLATION/APPLICATION/ERECTION

A. All cutting, repairing and structural reinforcing for the installation of this work shall be done by the General Contractor in conformance with the City's requirements.

B. If required, excavate and trench as necessary for the electrical installation, and when the work has been installed, inspected and approved, backfill all excavations with clean

earth from excavation, or imported sandy soil in maximum 8" (eight-inch) layers, moisten and machine tamp to 95% compaction, and restore the ground and/or paving or floor surfaces to their original condition.

C. Furnish and install all disconnect switches as required by code and Utility Company (both AC and DC).

3.04 EARTHQUAKE RESISTANT INSTALLATION & FASTENING:

A. All electrical equipment and raceways shall be anchored to withstand forces generated by earthquake motions. As a minimum, equipment and equipment frames shall be designed to withstand a force of 25% of the weight of the equipment and frame acting at its center of gravity. Anchorage of the equipment and/or frame to the structure shall be for a force of 50% gravity also acting at the center of gravity.

B. For floor or roof mounted equipment, the above values shall be doubled. Design stresses in either case may be increased 1/3 over normal allowable stresses but never beyond yield.

3.05 ADJUSTING AND CLEANING

A. All electrical equipment, including existing equipment not "finish painted" under other sections, shall be touched up where finished surface is marred or damaged.

B. All equipment shall be left in clean condition, with all shipping and otherwise unnecessary labels removed there from.

3.06 IDENTIFICATION

A. PV system related equipment: Inverters, switchboards, panel boards, distribution circuit breakers, disconnect switches, combiner boxes, transformers, and related electrical enclosures shall be properly identified by means of engraved laminated plastic descriptive nameplates mounted on apparatus using stainless steel screws. Nameplates shall have white letters with red background. Cardholders in any form are not acceptable.

B. Adhesive flexible stick-on labels are acceptable when manufactured specifically for solar equipment safety and warning placard requirements. Labels must be suitable for the environment in which they are to be installed without allowing future degradation, peeling, or loss of adhesion, specifically when subject to direct sunlight on a daily basis.

C. Provide all required safety and identification placards as required by code and as designated in section 26 3100.

3.07 PAINTING OF EQUIPMENT

A. Factory Applied: Electrical equipment shall have factory-applied painting systems

which shall, as a minimum, meet the requirements of NEMA ICS 6 corrosion-resistance test, except equipment specified to meet requirements of ANSI C37.20 shall have a finish as specified in ANSI C37.20.

B. Field Applied: Paint electrical equipment as required to match finish or meet safety criteria.

3.08 TESTING

A. General:

1. All inspections and tests shall be in accordance with the International Electrical Testing Association - Acceptance Testing Specifications ATS-2009 (referred to herein as NETA ATS-2013).

2. Final test and inspection to be conducted in presence of a City Representative: Tests shall be conducted at the expense of and by the proposer at a mutually agreed time. Submit written test reports.

3. The electrical installation shall be inspected and tested to ensure safety to building occupants, operating personnel, conformity to code authorities, and final Construction Shop Drawings.

4. Final Inspection Certificates: Prior to final payment approval, deliver to the City, signed certificates of final inspection.

a. Grounding System:

1) All ground connections shall be checked and the entire system shall be checked for continuity. The resistance of the ground system at the site shall be measured using a 3-point fall-of-potential method. The maximum ground resistance shall be three ohms. Provide one additional ground rod (per NEC), if the specified value cannot be obtained from the first test. The 2nd ground rod shall be located at least 20 feet from the first.

2) Ground tests shall meet the requirements of the National Electric Code, Article 250.

3) All PV system grounding shall meet the requirements of NEC Article 690.

4) See also section 26 3100, Part 3, for additional testing requirements.

3.09 GUARANTEE

A. The proposer shall provide a guaranteed annual system production of at least 90% of the calculated values. Refer to section 26 3100 – 1.01 for required values and the form of the guarantee.

**** END OF SECTION ****

DIVISION 26 3100 – PHOTOVOLTAIC SYSTEM ELECTRICAL

PART 1 – GENERAL

1.01 DESCRIPTION

A. Refer to section 26 0000 for related project requirements.

B. The photovoltaic system electrical size and annual kWH production values shall be based on the historic annual usage figures as provided in Appendix A.

C. The project intent is to maximize the annual kWH production value, without exceeding the historical annual cost of the energy to the City. Systems that may exceed the annual cost (in credited energy), shall be reduced to produce no more than to zero out the annual electrical energy bill, based on projected rate schedules and demand tiers.

D. The proposer shall provide a guaranteed annual system production of at least 90% of the calculated values. As part of the system design, provide the city with a schedule of calculated values, by year, for determination of the expected system production. The successful bidder shall provide the City with a letter of credit, in a form to be approved by the City Attorney, in the amount of $_____ against which the City may draw, at its discretion, if the values the City receives in any twelve month period is less than 90% of the calculated values. The amount of the draw shall reflect the cost to the City resulting from the failure of the Roof Mounted Photovoltaic System to provide 90% or more of the calculated value. If the amount of the letter of credit is reduced to less than 50% of its original amount, the City, in its discretion may require the successful bidder to restore the letter of credit up to its original amount.

1.02 WORK INCLUDED

A. Work included in this Section: All design, materials, labor, equipment, services, and incidentals necessary to install a complete roof mounted Photovoltaic (PV) System as specified hereinafter, including but not limited to the work listed below.

B. The system shall be utility grid connected with no storage batteries. The proposer shall be responsible for all required utility company coordination, final approval, and applications for the complete interconnection of the PV system with the utility company grid, including arrangements for a new bi-directional utility meter to replace the existing meter.

C. The proposer shall include all required energy calculations to justify the system size and production values within the criteria described above.

D. All design documents, cut sheets, calculations, and technical specifications shall be submitted, reviewed and accepted by the City, prior to start of construction.

E. General Specifications as described in Section 26 0000: General Electrical Criteria, are referred to herein and shall apply to this specification.

1.03 SCOPE

A. The system shall consist of arrays of framed photovoltaic modules, all equipment mounting hardware, terminal boxes, combiner panels (if required), quick-connect electrical connectors, DC wiring, DC disconnects, utility interactive inverters, AC disconnects, AC feeders, AC circuit breakers, AC panel boards / switchgear, and a complete data acquisition and monitoring systems to allow the City to monitor and utilize the collected data over the City network.

B. The system shall include the installation of permanent protective roof walkway pads to protect the roofing system from damage during routine maintenance. Roof walkway pad locations to be coordinated with the final PV array layouts and access areas.

C. The work shall include furnishing all labor, materials, and equipment necessary to form a complete installation, ready for operation to produce solar power at the City Hall building.

D. The installing contractor shall be responsible for adequate clearance and equipment space within the allotted areas and existing building and site conditions. All equipment and sizes / clearances shall be coordinated with the City prior to rough-in and shall be field verified by the proposer.

E. The installer shall complete the submission for the utility interconnection agreement contract in conjunction with the City's input and approval, including rate schedule (i.e. TOU or other) designations. In order for the installer to act on behalf of the City, the installer (in conjunction with the City) shall submit to the utility company the proper authorization forms.

F. System installation shall include the programming, set-up, and commissioning of a web based data acquisition system and interactive data application to allow public viewing of the real-time system performance and past historical performance.

1.04 APPLICABLE GUIDELINES / REGULATIONS / STANDARDS

A. Office of the State Fire Marshal - Solar Photovoltaic Installation Guidelines.

B. CPUC approved Electric Rule 21 – Generating Facility Interconnections

C. UL1741 (Inverters, Converters, and Controllers for Independent Power Systems)

D. UL1703 (Standard for Flat-Plate Photovoltaic Modules and Panels).

E. IEEE 929 (2000) – Recommended Practice for Utility Interface of Photovoltaic (PV) Systems.

F. IEEE 1262 (1995) – Recommended Practice for Qualifications of Photovoltaic (PV)

Modules.

G. NEC Article 690.

H. All applicable Pacific Gas & Electric Company Guidelines and Standards for PV Systems, electrical utility systems, and metering requirements.

1.05 QUALITY ASSURANCE

A. All equipment shall be Underwriters' Laboratories (UL) listed.

B. Installer Qualifications – The installing contractor shall be approved by the PV equipment manufacturer(s) to install the PV materials.

1.06 SUBMITTALS

A. Submit the following for approval:

1. Site plans with the PV System layouts (based on submitted materials).
2. Single line Diagram indicating all required connections and utility tie-in.
3. Array calculations including string design, string amperage, array amperage (including short circuit currents), and DC voltages (maximum and minimum based on coldest record low and average high ambient temperatures).
4. To-Scale plans of the equipment areas with the new and existing equipment drawn to scale, with proper clearances.
5. DC combiner boxes with fusing (if required).
6. DC/AC Inverter(s).
7. Electrical panels and switchgear.
8. Isolation Transformers (if applicable).
9. kWH Meter and Data Logger equipment.
10. Data Acquisition System, including software.
11. PV System weights.
12. PV Modules.
13. Installation Manuals.
14. Operation and Maintenance manuals.
15. Mounting hardware.

16. Wiring (AC and DC).

17. Disconnects.

18. Placards (with all code and utility required designations).

19. Testing and certification / commissioning results (upon completion).

1.07 MATERIALS, DELIVERY, STORAGE, AND HANDLING

A. All materials shall be new.

B. All equipment and modules shall be handled with care so as not to damage the delivered products. All equipment shall be installed in new and neat condition.

C. Appropriate protective clothing shall be worn when handling the equipment. Such clothing shall include hard hats and steel-toe boots when lifting materials to roof, and insulated gloves when working on an active system.

PART 2 – PRODUCTS

2.01 ACCEPTABLE MANUFACTURERS

A. Acceptable system manufacturers/vendors shall be as specified in other sections of this RFP. Manufacturers shall provide their latest line of equipment, meeting all current industry standards and all performance criteria set forth in this RFP. The City seeks equipment from proven, industry leading manufacturers in solid financial standing, producing tier-one equipment.

B. Contractor proprietary products shall have an ICC report or a testing report stamped and signed by a licensed California Engineer.

2.02 MATERIALS

A. All PV modules shall be UL 1703 listed and shall comply with IEEE 1262 "Recommended Practice for Qualifications of Photovoltaic Modules".

1. PV modules shall be sourced from a field tested product line that has been commercially available for no less than three fiscal years and from a manufacturer that has produced no less than 250MW of panels in the prior fiscal year to the date of the RFP.

2. PV Modules shall be UL listed for the specified voltage (typically 600V or 1000VDC).

3. Include all known and future duties, tariffs, export tariffs, customs, and shipping costs.

4. PV modules shall comply with the State of California SB1 Guidelines for Eligibility.

5. PV modules shall be classified as Tier 1 by Bloomberg New Energy Finance.

6. PV modules shall have a 25-year design life, designed for normal, unattended operation.

7. The solar module manufacturer shall provide a 25-year warranty on the solar modules with at least 80 percent power output guaranteed at 25 years. The solar module manufacturer shall confirm that the warranty applies on an "as installed basis," i.e., it will confirm the panels were installed according to its requirements and specifications for installation.

B. All Inverters shall be UL 1741 listed and Comply with IEEE 1547, including testing to IEEE 1547.1 and IEEE C62.45. Regulatory standards compliance shall also include IEEE C62.41.2 and CSA107.1-01.1.

C. Inverters carry a minimum 5-year standard warranty with options for at least a 10-year extended warranty.

D. Suggested inverter type for the system is 3-phase string inverters with multiple MPPT inputs. Micro-inverters may be used in locations subject to shading impacts.

E. All inverters shall be sized as required to support the PV module production value within the rating of the equipment, together with all other components.

F. All inverters shall be CEC approved and shall be utility line interactive type, mounted in compliance with manufacturer's recommendations or limitations, to maintain full warranty. Choose mounting locations to limit noise to normally occupied areas. Provide noise mitigation design and materials as required.

G. All inverters shall meet the following requirements:

1. Nominal AC Voltage (Three-phase, + 10%)

   a. 208 or 480 VAC (provide transformer if 480V Inverters are used)

   b. Nominal AC Frequency (+ 0.5 Hz)

      1) 60 Hz

   c. Line Power Factor

      1) >0.99

   d. AC Current Distortion

      1) <5% THD

e. Maximum Open Circuit Voltage DC

    1) 600 VDC or 1000 VDC, depending on system equipment used.

f. Maximum Ripple Current (% of rated current)

    1) <5%

g. Minimum Inverter Efficiency

    1) >97%

h. Temperature Range Ambient

    1) -4° F to 122° F (-20° C to 50° C)

i. Enclosure Environmental Rating

    1) NEMA 3R or 4X

j. Enclosure Environmental Rating

    1) Galvaneal folded steel enclosure

k. Relative Humidity (non-condensing)

    1) 0-95%

l. Sound level

    1) <55dB(A)

m. Cooling Method

    1) Natural or forced convection cooling

n. Protective Functions

    1) Standard wakeup voltage, wakeup time delay, shutdown power, shutdown time delay, AC over / under voltage and time delays, AC over / under frequency and time delays, ground over current, over-temperature, AC and DC over current, DC over voltage

o. User Display

    1) Standard-LCD with on/off capability

p. AC Disconnect

    1) Load break rated

q. DC Disconnect

1) 600 VDC or 1000 VDC load break rated

r. Internal combiner panel option to allow connections of sub-arrays at the Inverter without the use of additional equipment.

s. Include placards on the Inverters per section 3.01 below.

H. Upon connection of the new PV system, provide a placard on the Main Switchboard to identify the two sources of power feeding the equipment.

I. Combiner boxes (where used) shall be Nema 3R rated and shall include fuses for string inputs and a bus bar to combine the strings into sub-arrays, for input into the Inverter system. Minimum combiner box output bus ampacity shall be 156% of the rated short circuit current available to be carried on the bus (the sum from all strings to the bus).

1. Provide a placard on the combiner box(es) to read: "DC Combiner Box – 600 VDC (or 1000 VDC where applicable) Maximum".

J. All AC interconnecting feeders shall be sized to NEC (75 degree column) based on associated disconnect amperage. Conduit fill to 40% max. Include temperature derating as required for the ambient temperatures and any directly exposed (to sunlight) conditions per NEC. Provide equipment grounding conductor in each conduit.

K. All exterior mounted raceways shall be designed and installed to accommodate expansion and contraction due to heating affects, including adequate cable length and listed expansion couplings. All expansion couplings or installations shall include grounding bonding jumpers as required by code.

L. All AC circuits to be 3-wire or 4-wire + ground. All grounding per NEC 690, Part V.

M. All DC circuits and feeders sized to NEC (90 degree column) based on associated disconnect amperage. Minimum ampacity shall be 156% of the rated short circuit current available to be carried on the specific conductor. Conduit fill to 40% max. Include temperature derating as required for the ambient temperatures and any directly exposed (to sunlight) conditions per NEC. Provide equipment grounding conductor in each conduit.

N. All DC circuits to be 2-wire + ground.

O. All AC and DC wiring in conduit to be RHW-2, THWN-2, or XHHW-2 (90 degree) wet rated for use with 90 degree listed terminals on PV equipment.

P. All exposed DC wiring to be USE-2 or SE (90 degree) wet rated and sunlight resistant.

Q. All above ground exposed conduit shall be rigid galvanized steel with threaded fittings. Paint all visible exposed raceways and boxes to match adjacent surface finish after installation. Colors to be selected and approved by the City.

R. All interior conduit to be EMT with steel set-screw fittings (no cast fittings).

2.03 WIRE MANAGEMENT

A. All inter-array wiring methods must meet or exceed current industry standards for wire management, strain relief and fastening.

B. All inter-array wire management shall use stainless steel or galvanized steel cable clips, Heyco or similar. UV rated cable ties shall be used minimally and only in locations where the use of cable clips are impossible.

C. Where exposed, wires, cables and conductors shall be managed in a neat and orderly manner. Where exposed to environmental conditions e.g. sunlight, rain, wind etc. and visible from below, wires shall be fastened in a uniform and discrete fashion.

D. Strain relief and drip loops shall be utilized at all entrances to and from conduit bodies, junction boxes, weather heads, switchgear, inverters and panelboards etc. Conductors shall be strapped with strain relief as not to stress panel leads, home runs or mechanically crimped connections within the array.

2.04 MISC. SYSTEM REQUIREMENTS

A. All exterior equipment to be sunlight and UV resistant as well as rated for elevated temperatures at which they are expected to operate (in hot sunlight).

B. Heavy duty urethane sealants shall be used for all non-flashed roof penetrations.

C. No dissimilar metals allowed to contact each other (use plastic or rubber washers).

D. No aluminum in contact with concrete or masonry materials.

E. Bolted connections shall be non-corrosive and include locking devices designed to prevent twisting over the design life of the PV system.

F. Environmental impact of system equipment containing hazardous materials shall be disclosed, as well as maintenance and disposal instructions for equipment at the end of its useful life.

2.05 SYSTEM ELECTRICAL

A. The modules shall be interconnected using cable assemblies. The pigtails shall be quick-connect electrical wiring connections rated for the application (90 degree rated).

B. The array shall have at least one terminal box, providing a watertight entry to the raceway system leading to the Inverter(s).

C. Full specifications of the inverter shall be supplied as part of the system submittal.

D. All major components of the systems and the installation procedures shall meet

National Electrical Code requirements, including Article 690.

E. The inverters shall automatically drop-off-line when normal utility power is lost to avoid un-intentional islanding effects. Drop-off to be activated by over-voltage (110%) and under-voltage (88%), and shall be adjustable. Frequency drifts outside 59.3 to 60.5 Hz for more than 10 cycles shall also activate automatic drop-off. Automatic reconnection shall not occur until the normal utility power has been stable for at least 60 seconds.

F. All electrical system equipment shall be properly rated to withstand and interrupt (in the case of over current protection devices) the available fault current at the point of application.

G. The system shall be capable of operating between a power factor of 0.9 lagging to 0.9 leading.

H. All required overcurrent protection and electrical bussing sizes per NEC 690.

I. Provide a grounding electrode connection from each inverter assembly to the nearest building steel per NEC 690.45 and the manufacturers instructions. Inverters shall have GFCI protection, allowing grounding per NEC Table 250.122.

2.06 MONITORING

A. A Data Acquisition and Monitoring System (DAS) shall be provided. The system shall include, but not be limited to, the measurement, calculation, display, and reporting of the following items:

1. PV production in 15-min reporting intervals.

2. System electrical functions (instantaneous and accumulated power output (kW and kWh), AC and DC system voltage and amperage, and peak value tracking with associated time stamps).

3. Pounds of CO2 emissions avoided from the generation of PV energy at the site (compared to conventional coal and gas production methods).

4. Generation data in the Western Renewable Energy Generation Information System (WREGIS) format.

B. Cellular data or a direct internet (cabled) connection shall be used for communications with the DAS and metering system. Coordinate with the City for access to the local site data distribution system (internet), as required.

C. A separate total building power consumption meter shall be provided. The consumption meter shall record total energy consumed by the building loads (from both the utility and the PV sources combined). The consumption meter CT's shall be located downstream of the PV interconnection point, and before or directly after the main service breaker, before the sub-feed loads. The meter shall include a web-

enabled interface and 15-min reporting intervals to be synced with the PV meter production intervals. The purpose of the metering is to allow comparison between the generated PV production, total utility company usage, and total building usage.

D. The system shall include a separate public area viewing monitor to display system parameters, including building usage, system production, and weather data.

E. Contractor shall load all required software on City provided computers and train City Staff in operation and maintenance of software or cloud based systems and related monitoring functions, including presentation of the parameters listed above on the public viewing monitor.

F. A weather station shall be provided at the site (on the roof). The weather station shall provide at a minimum: solar irradiation (coplanar and horizontal), ambient temperature, wind speed, and any other data relevant to weather correction of solar PV system performance.

PART 3 - EXECUTION

3.01 REQUIRED PLACARDS

A. All placards shall be machine generated phenolic type with red background and white lettering, affixed to equipment with stainless steel screws (no adhesives allowed). Minimum lettering size to be 1/4" unless otherwise noted or required for legibility.

B. Adhesive flexible stick-on labels are acceptable when manufactured specifically for solar equipment safety and warning placard requirements. Labels must be suitable for the environment in which they are to be installed without allowing future degradation, peeling, or loss of adhesion, specifically when subject to direct sunlight on a daily basis

C. Provide a placard clearly visible at the main service panel to identify both sources of power, with the following wording in 1/4" high lettering per NEC 690: "Warning - This Service Is Fed By Two Sources Of Power – The Utility Service Main Disconnect And The PV System Main Disconnect – Both Services Must Be Disconnected To Remove Power From The Switchboard".

D. If a load-side connection is utilized, provide a placard on the PV system input circuit breaker at the main panel with the following wording in 1/4" high lettering per NEC 690: "Warning – Inverter Output Connection – Do Not Relocate This Overcurrent Device".

E. Provide a placard on all PV system disconnects with the following wording in 1/4" high lettering per NEC 690: "Warning - Electric Shock Hazard - Do Not Touch Terminals - Terminals On Both The Line and Load Sides May Be Energized In The Open Position".

F. Provide a placard on the Main PV System Disconnect (adjacent to each main service panel) with the following information in 1/4" high lettering per NEC 690: "Photovoltaic

Power Source Disconnect - Operating Current: X Amps; Operating voltage: XX VAC; Maximum System Voltage: XX VAC; Short-Circuit Current: XXX Amps", where X is the operating current, XX is the system voltage, and XXX is the maximum short circuit current contribution of the generating facility at the point of interconnection with the utility system.

G. Provide a placard at the Main Switchboard with the following information in 1/4" High lettering per NEC 690: "Caution - Possible Backfeed From Photovoltaic Power System – X VAC, XX Amps", where X is the system voltage and XX is the maximum AC amperes of the installed system.

H. Provide a placard on each PV System Inverter with the following information in 1/4" high lettering: "Photovoltaic Power Source Inverter Rating - Operating Current: XX Amps; Operating voltage: XXX VDC; Maximum System Voltage: 600 VDC; Short-Circuit Current: XXXX Amps", where XX is the maximum DC amperes of the installed system, XXX is the operating voltage DC, and XXXX is the short circuit current that the Inverter can provide (from all strings in parallel).

I. Provide a nameplate for all Combiner Boxes (where used) to read: "DC Combiner Box [XXX]– [System Voltage] VDC Maximum".

J. Provide utility-required system directory placard and utility safety switch identification placard as required by local utility company, to identify all system components.

3.02 UTILITY INTERCONNECTION

A. The Contractor shall complete the submissions for the utility interconnection agreement with the City's approval. The Contractor shall submit the required authorization form with the utility to act on behalf of the City.

B. The PV generation system at the City Hall shall not be interconnected with the Utility's distribution facilities until written authorization from the Utility Company has been obtained. Unauthorized interconnections may result in injury to persons and damage to equipment or property for which the installing contractor may be liable.

3.03 INSTALLATION STANDARDS

A. System Installation shall conform to the equipment manufacturers Installation Manual(s) and requirements or guidelines.

B. All Local, State, and NEC codes shall be observed, including all industry standards related to the installation, operation, and maintenance of photovoltaic power systems.

3.04 TESTING

A. Photovoltaic modules shall be tested in the factory for design performance and results shall be included in the Operation and Maintenance manuals.

B. Inverters shall be factory tested for performance and the results shall be included in the Operation and Maintenance manuals.

C. System testing of the installed photovoltaic array shall be performed on all system strings and recorded in the Operation and Maintenance manuals.

D. Megger test each array feeder before energizing to establish that no shorts or ground exist at any point on the arrays.

E. Testing to be performed per CPUC Electric Rule 21 testing procedures and requirements. All testing to be done on "no-cloud" days to avoid system fluctuation by passing clouds. Installer to provide all testing and certification / commissioning.

F. System start-up procedure will be as outlined by the Manufacturer's Installation Manual and the Inverter Manual.

3.05 SYSTEM MAINTENANCE CONTRACT

A. As part of the bid proposal, as a separate line item value, provide a maintenance contract starting at the date of final acceptance of the work.

B. Contract shall include full inspection and maintenance of the installed system for the first 5 (five) years. Furnish trained experts and equipment to check, adjust, clean, and otherwise maintain the photovoltaic system in operation without defects or deterioration.

B. The contract shall include a minimum of two site visits per year for cleaning and maintenance.

**** END OF SECTION ****

Sheet Number: E1.1	Revisions	Job No: 218305 Drawn By: PJC Checked By: PJC Cad File: Date: 3/1/13	OVERALL SITE PLAN	CITY OF BRISBANE CITY HALL ROOF MOUNTED PV SYSTEM 50 PARK PLACE BRISBANE, CA	OMAHONY & MYER ELECTRICAL ENGINEERING and LIGHTING DESIGN 4340 REDWOOD HWY., SUITE 345 SAN RAFAEL, CALIFORNIA 94903 (415) 491-0600/FAX (415) 479-9662 www.omahonyandmyer.com

BRISBANE CITY HALL PV SYSTEM – 216085

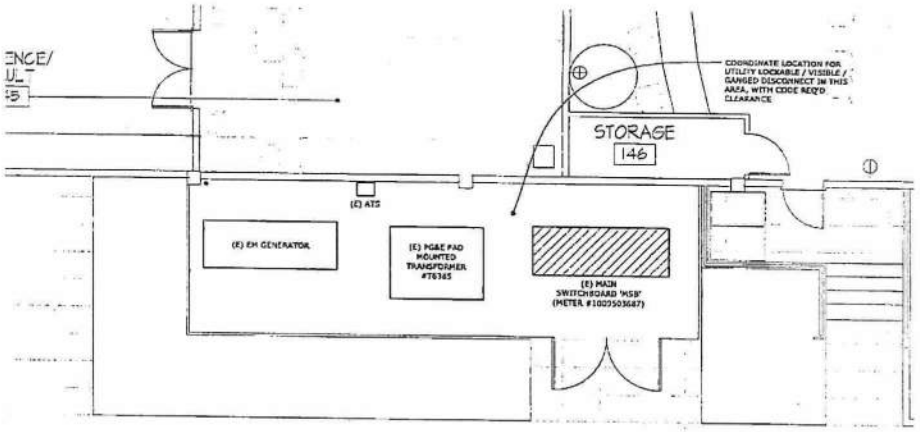

PARTIAL SITE PLAN - UTILITY SERVICES
SCALE: 1/4" = 1'-0"
FILE:

REF. NORTH

COPPER FEEDER SCHEDULE		
FEEDER	CONDUIT	CONDUCTORS
4004	(1) 4"	(4)500 MCM & (1)#1/0 G.
2254	(1) 3"	(4)#4/0 & (1)#4 G.
2004	(1) 2"	(4)#3/0 & (1)#4 G.
1004	(1) 2"	(4)#2 & (1)#6 G.

FEEDER TAG KEY

2(4)#3/0

- INDICATES DOUBLE NEUTRAL
- WIRE QUANTITY
- FEEDER AMPACITY

NOTE: NOT ALL FEEDERS ON THIS SCHEDULE ARE NECESSARILY USED ON THIS PROJECT.

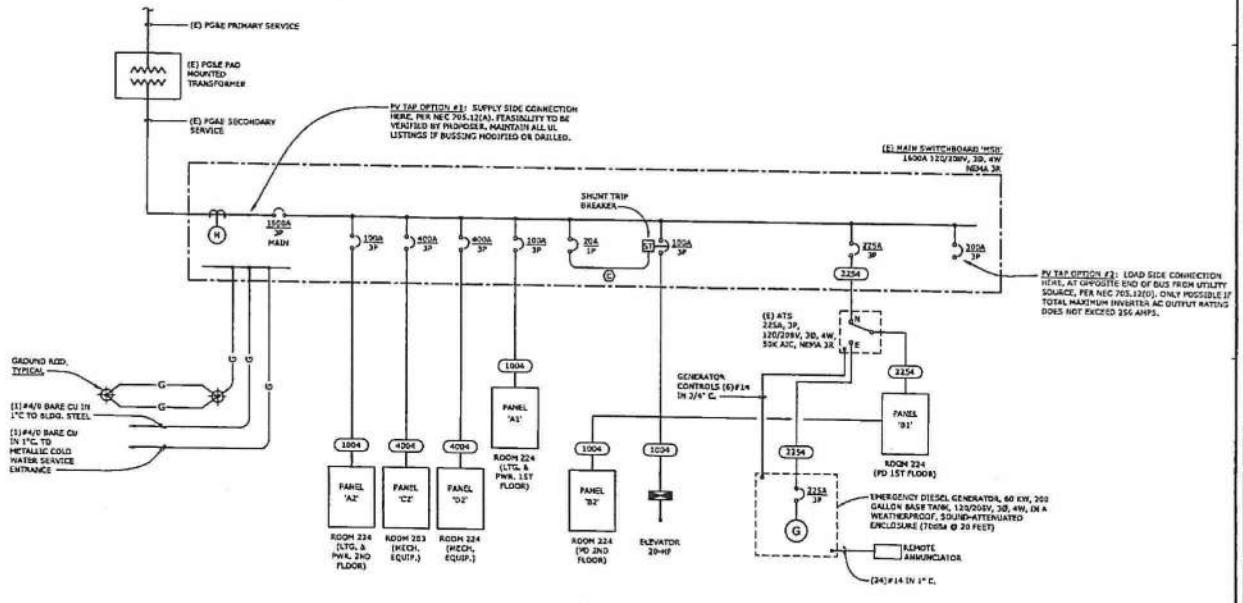

SINGLE LINE DIAGRAM (FOR REFERENCE ONLY)
SCALE: NONE
FILE:

OMAHONY & MYER
ELECTRICAL ENGINEERS and LIGHTING DESIGNERS

CITY OF BRISBANE CITY HALL
ROOF MOUNTED PV SYSTEM
50 PARK PLACE
BRISBANE, CA

SINGLE LINE / PARTIAL PLAN

Job No:	216085
Drawn By:	PJC
Checked By:	PJC
Cad File:	
Date:	2/1/13

Revisions

Sheet Number
E5.1

Appendix A

7/1/14-6/30/16 Energy Report

City of Brisbane Department of Public Works
Roof-Mounted Photovoltaic System

City of Brisbane (SFO / 1000056)

SA Id: 1720503208 **Open: Y** Bus Act Desc: Svc Descriptor: City Hall **From Jul 1, 2014 to Jun 30, 2016**

Per Name: CITY OF BRISBANE
Acct Id: 1720503326
Meter #: 1009503687
Billing Addr: 50 PARK PL, BRISBANE, CA 94005
Service Addr: 50 PARK LN, BRISBANE, CA 94005

Date	Days	Rate	Gas Charges (Dollars)	Therms	Electric Charges (Dollars)	On-Peak Usage (kwh)	Part-Peak Usage (kwh)	Off-Peak Usage (kwh)	Total Usage (kwh)	Hours	Billing Demand (kW)	Created Demand (kW)	On-Peak Demand (kW)	Part-Peak Demand (kW)	Off-Peak Demand (kW)	Taxes
06/14/2016	30	HA10SX			4,734.16	5,202	5,346	10,874	21,423	306	70	70	70	58	52	6.21
05/15/2016	31	HA10SX			3,814.69	2,319	7,085	10,996	20,400	334	61	61	55	56	61	5.91
04/14/2016	30	HA10SX			3,224.48	0	9,697	10,665	20,362	351	58	58	0	58	58	5.91
03/15/2016	29	HA10SX			2,990.24	0	9,157	9,765	18,922	338	56	56	0	56	56	5.49
02/15/2016	33	HA10SX			3,401.86	0	10,062	12,131	22,192	358	62	62	0	59	62	6.44
01/13/2016	30	HA10SX			3,404.83	0	10,309	12,509	22,817	300	76	76	0	64	76	6.61
Total for 2016:			0.00	0	21,570.26	7,521	51,655	66,940	126,116	1,988						36.57
12/14/2015	29	HA10SX			3,020.22	0	9,855	10,774	20,629	313	66	66	0	59	66	5.98
11/15/2015	32	HA10SX			3,908.88	2,884	7,494	11,359	21,737	351	62	62	62	62	59	6.31
10/14/2015	29	HA10SX			4,660.25	5,471	5,670	10,101	21,242	299	71	71	71	62	66	6.16
09/15/2015	30	HA10SX			4,848.66	5,731	5,705	10,772	22,209	300	74	74	74	67	65	6.44
08/16/2015	32	HA10SX			5,343.25	5,846	5,918	11,461	23,226	258	90	90	90	80	74	6.74
07/15/2015	29	HA10SX			5,099.72	6,032	5,810	10,323	22,166	261	85	85	85	77	67	6.43
06/16/2015	30	HA10SX			4,445.97	4,837	5,091	9,857	19,784	283	70	70	70	61	59	5.74
05/17/2015	31	HA10SX			3,549.83	2,213	6,841	10,542	19,596	363	54	54	48	54	54	5.68
04/16/2015	30	HA10SX			2,884.76	0	9,638	9,652	19,290	316	61	61	0	61	61	5.59
03/17/2015	29	HA10SX			2,861.43	0	9,469	9,742	19,210	300	64	64	0	64	54	5.57
02/16/2015	33	HA10SX			3,305.28	0	10,037	12,638	22,674	324	70	70	0	61	70	6.58
01/14/2015	30	HA10SX			3,172.40	0	9,519	11,874	21,392	281	76	76	0	76	73	6.20
Total for 2015:			0.00	0	47,100.65	33,014	91,046	129,094	253,155	3,649						73.42
12/15/2014	29	HA10SX			2,806.20	0	9,086	10,020	19,106	324	59	59	0	55	59	5.54
11/16/2014	32	HA10S			3,764.11	0	0	0	21,188	331	64	64	0	0	0	6.14
10/15/2014	29	HA10S			4,350.61	0	0	0	20,591	303	68	68	0	0	0	5.97
09/16/2014	30	HA10S			4,491.38	0	0	0	21,360	301	71	71	0	0	0	6.19
08/17/2014	32	HA10S			4,592.88	0	0	0	22,458	335	67	67	0	0	0	6.52
07/16/2014	30	HA10S			4,306.16	0	0	0	20,081	279	72	72	0	0	0	5.82
Total for 2014:			0.00	0	24,311.34	0	9,086	10,020	124,784	1,873						36.18
Total for SA id: 1720503208:			0.00	0	92,982.25	40,535	151,787	206,054	504,055	7,509						146.17
Report Total:			0.00	0	92,982.25	40,535	151,787	206,054	504,055	7,509						146.17

[CONFIDENTIAL INFORMATION]